FLOMAX® 10

2" x 2" Self Priming Centrifugal Pump

FLOMAX® 10 self-priming centrifugal pumps are capable of creating vacuum sufficient to lift liquids from heights up to 25 feet above the source. Once primed, the pump's built in flapper valve will maintain a full column of liquid in the suction line.

A FLOMAX® 10 PumPAK® is a fully assembled and run tested pump end that can be easily coupled to a number of drivers such as hydraulic motors, 182TC and 184TC frame motors and gas engines. A bearing pedestal is also available for T-frame motor or belt drive.

Standard features include stainless steel drive sleeve, stainless steel fasteners, renewable wear plate, and a semi-open dynamically balanced impeller.

The FLOMAX® series of pumps are commonly used in Industrial, OEM, Agricultural and Marine applications, such as: Bilge Pumps, Auxiliary Fire Pumps, Ballast Transfer Pumps, Washdown Pumps, Fertilizer and Pesticide Pumps, Applicators & Sprayers, Blending Pumps, Nurse Tanks, Bulk Transfer Pumps and much more.

SPECIFICATIONS:

Suction and Discharge	2" x 2" NPT
Materials of Construction	Bronze
	Cast iron
Flow	Up to 225 GPM
Head Feet	Up to 145'
Impeller	6.0" max diameter, semi-open
Max Solid Size	.625"
Motor	Up to 7.5 HP
Drive Options	Close coupled 184TC
	Engine mount 11 HP
	Engine mount 13 HP
	Engine mount 5.5 HP
	Engine mount 6.5 HP
	Pedestal
	PumPAK® (without motor)
Seal	Special seal material combinations available (consult factory)
	Standard carbon / ceramic / Viton



Application:

- Agricultural
- Industrial
- Marine
- OEM

Features:

- Renewable wear plate
- Stainless steel drive sleeve
- Stainless steel fasteners
- Up to a 25' suction lift

Options:

- Base plate pictured above is optional
- Double seal available for dry run applications
- Hydraulic motor .73 cu. in.

FLOMAX® 10

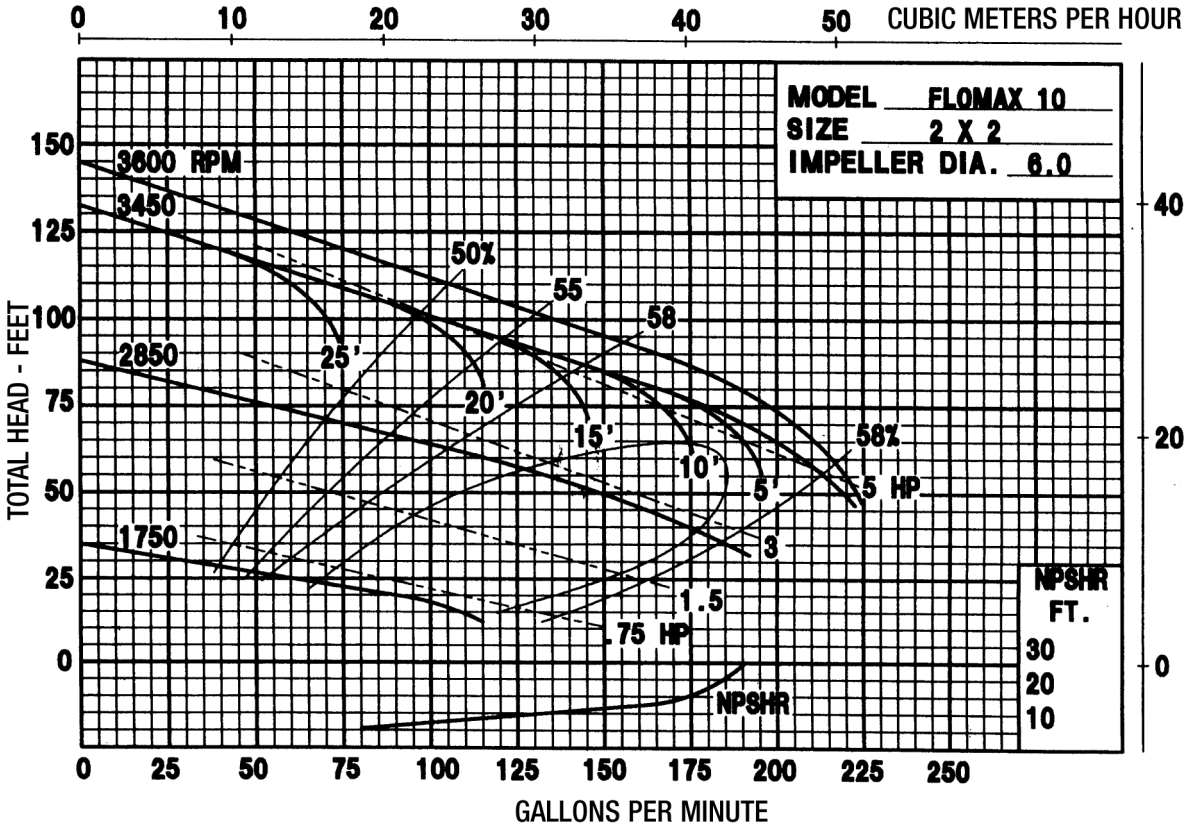

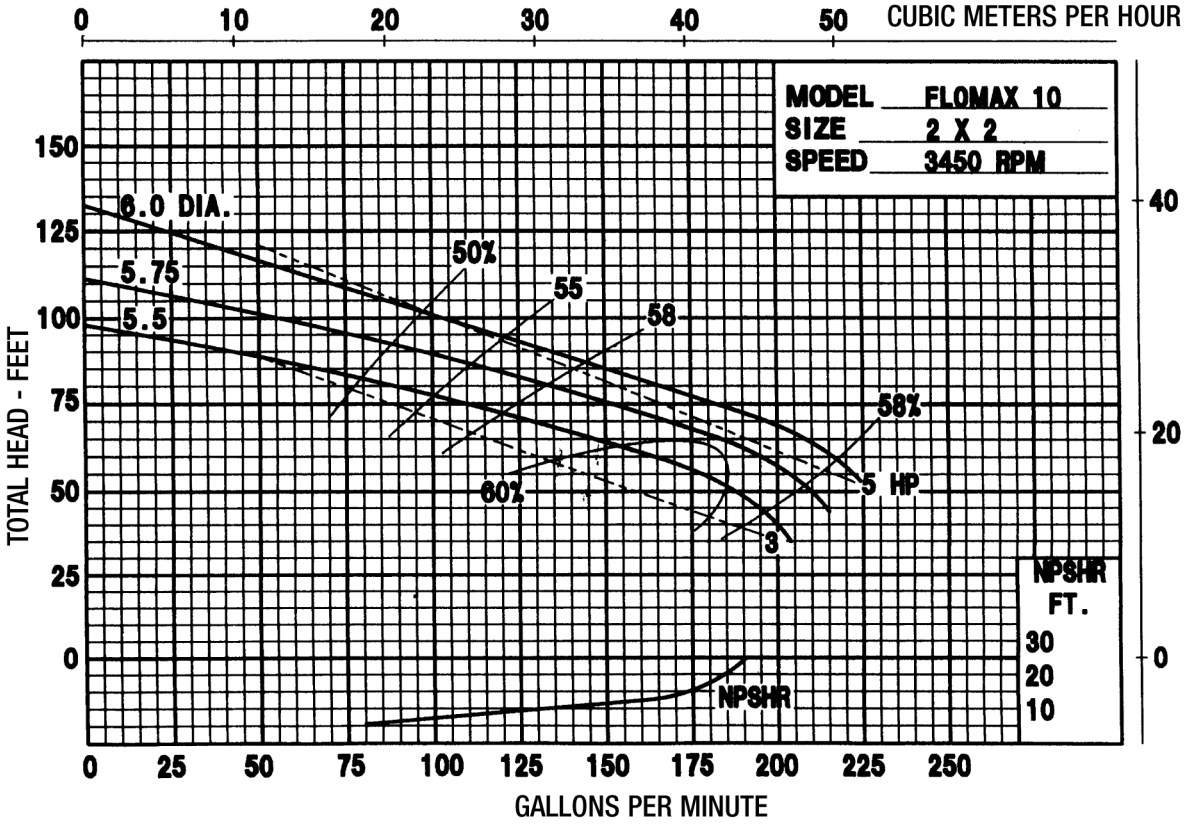

34800 BENNETT • FRASER, MI 48026-1686
(586) 293-8240 • FAX (586) 293-8469
(800) 563-8006 • www.mppumps.com

FLOMAX® 10

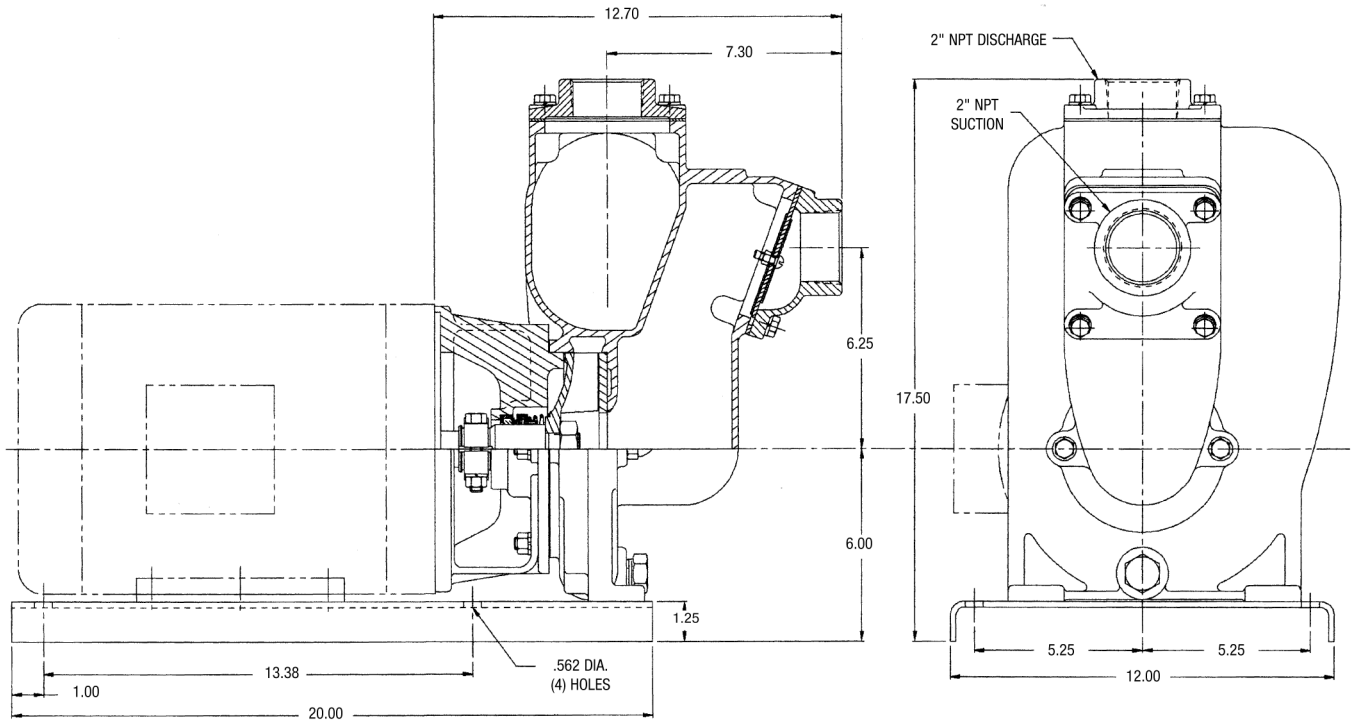

34800 BENNETT • FRASER, MI 48026-1686
(586) 293-8240 • FAX (586) 293-8469
(800) 563-8006 • www.mppumps.com

MP PUMPS SERVICE PARTS LIST

- Self-Priming
- Pumpak
- Close Coupled Electric Motor Drive

Flomax 10 2" x 2" Pipe Size
Flomax 15 3" x 3" Pipe Size

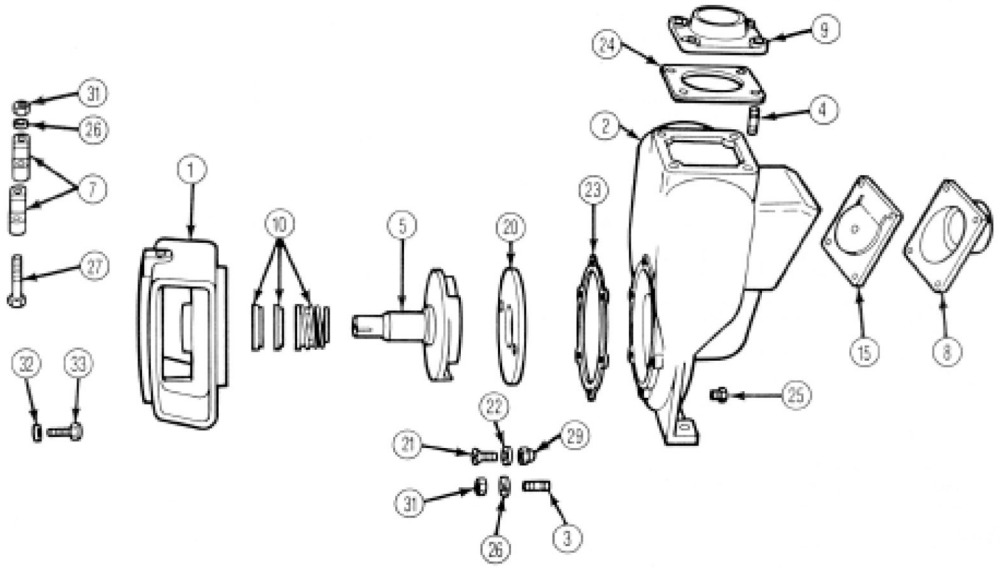

IMPORTANT: When ordering parts, specify model and serial number shown on nameplate.
N/S means "not shown" in exploded view of parts.

ITEM	PART NO.	DESCRIPTION	QUANTITY REQUIRED PER MODEL			
			CAST IRON		ALUMINUM	BRONZE
		FLOMAX 10-2"	21366	21421	21364	21365
		FLOMAX 15-3"	21384	21428	21382	21383
HOUSING						
	24304	Housing Assembly - Cast Iron - Inc:	1	1		
2	22351	Housing - Cast Iron	1	1		
3	21261	Stud - S.S. - 3/8"	14	14		
		6 - Housing to Adaptor				
		8 - Inlet and Outlet				
25	21267	Drain Plug - S.S. - 1/4" NPT	1	1		
	24302	Housing Assembly — Aluminum - Inc:			1	
2	22349	Housing — Aluminum			1	
3	21261	Stud - S.S. - 3/8"			14	
		6 - Housing to Adaptor				
		8 - Inlet and Outlet				
25	21267	Drain Plug - 1/4" NPT			1	
	24303	Housing Assembly - Bronze - Inc:				1
2	22350	Housing - Bronze				1
3	21721	Stud - 3/8" - B				14
		6 - Housing to Adaptor				
		8 - Inlet and Outlet				
25	21186	Drain Plug - S.S. - 1/4" NPT				1
4	21291	Cap Screw - 3/8"	8	8	8	
31	21268	Hex Nut - S.S. — 3/8"	14	14	14	
		6 - Adaptor to Housing				
		4 - Inlet Flange				
		4 - Outlet Flange				
31	21230	Hex Nut - Bronze - 3/8"				14
26	21266	Lockwasher - S.S. - 3/8"	14	14	14	
		6 - Adaptor to Housing				
		4 - Inlet Flange				
		4 - Outlet Flange				
26	26051	Lockwasher - Bronze — 3/8"				14
15	23040	Flapper Assembly	1	1	1	1
23	22240	Gasket - Housing to Adaptor	4	4	4	4
24	22358	Gasket - Outlet Flange	1	1	1	1

MP PUMPS, INC.
34800 BENNETT • FRASER, MI 48026-1686
(586) 293-8240 • FAX (586) 293-8469
(800) 563-8006 • www.mppumps.com

FORM 7006-C

PRINTED IN U.S.A.

ITEM	PART NO.	DESCRIPTION	QUANTITY REQUIRED PER MODEL			
			CAST IRON		ALUMINUM	BRONZE
		FLOMAX 10-2"	21366	21421	21364	21365
		FLOMAX 15-3"	21384	21428	21382	21383
FLANGES						
8	22369	Flange - 2" - Inlet - Cast Iron	1	1		
8	22367	Flange - 2" - Inlet - Aluminum			1	
8	22368	Flange - 2" - Inlet - Br.				1
8	22468	Flange - 3" - Inlet - Cast Iron	1	1		
8	22466	Flange - 3" - Inlet - Aluminum			1	
8	22467	Flange - 3" - Inlet - Br.				1
9	22372	Flange - 2" - Outlet - Cast Iron	1	1		
9	22370	Flange - 2" - Outlet - Aluminum			1	
9	22371	Flange - 2" - Outlet - Br.				1
9	22471	Flange - 3" - Outlet - Cast Iron	1	1		
9	22469	Flange - 3" - Outlet - Aluminum			1	
9	22470	Flange - 3" - Outlet - Br.				1
WEAR PLATE						
	22376	Wear Plate Assembly - Steel - Inc:	1	1		
20	22244	Wear Plate - Steel	1	1		
21	21262	Flat Head Screw - S.S. - 3/8"	2	2		
22	21271	Annular Gasket - 5/8"	2	2		
	22374	Wear Plate Assembly - Aluminum - Inc:			1	
20	22242	Wear Plate - Aluminum			1	
21	21262	Flat Head Screw - S.S. - 3/8"			2	
22	21271	Annular Gasket - 5/8"			2	
	22375	Wear Plate Assembly - Bronze - Inc.				1
20	22243	Wear Plate - Bronze				1
21	22360	Flat Head Screw - S.S. - 3/8"				2
22	21271	Annular Gasket - 5/8"				2
29	21263	Acorn Nut - S.S. - Wear Plate - 3/8"	2	2	2	
29	26053	Acorn Nut - Bronze - Wear Plate 3/8"				2
IMPELLER						
5	23386	Impeller Assembly - Cast Iron - Inc:				
	22417	Locknut - 1-14	1	1		
	22435	Sleeve - 1-1/8" Bore	1	1		
	22499	Impeller - Cast Iron	1	1		
5	23384	Impeller Assembly - Aluminum - Inc:			1	
	22417	Locknut - 1-14			1	
	22435	Sleeve - 1-1/8" Bore			1	
	22497	Impeller - Aluminum			1	
5	23385	Impeller Assembly - Br. - Inc:				1
	22417	Locknut - 1-14				1
	22435	Sleeve - 1-1/8" Bore				1
	22498	Impeller - Br.				1
N/S	22404	Shim - Impeller - S.S. - 3/4"	1	1	1	1
CLAMP						
	23039	Impeller Clamp Assembly - Inc:	1	1	1	1
7	22356	Clamp	2	2	2	2
26	21266	Lockwasher - S.S. - 3/8"	2	2	2	2
27	21269	Capscrew - S.S. - 3/8"	2	2	2	2
31	21268	Hex Nut - S.S. - 3/8"	2	2	2	2
27	21269	Capscrew - S.S. - Clamp - 3/8"	2	2	2	2
SEAL						
10	22361	Seal Assembly - Self-lubricated	1	1	1	1
ADAPTOR						
1	22433	Adaptor - Cast Iron	1	1		
1	22431	Adaptor - Aluminum			1	
1	22432	Adaptor - Bronze				1
32	21246	Capscrew - S.S. - Adaptor to Motor - 1/2"	4	4	4	4
33	21254	Lockwasher - S.S. - Adaptor to Motor	4	4	4	4

MP PUMPS, INC.
TECUMSEH PRODUCTS COMPANY
34800 BENNETT DRIVE • FRASER, MI 48026-1686
(586) 293-8240 • FAX (586) 293-8469
(800) 563-8006

FORM 7006-C
PRINTED IN U.S.A.

21363

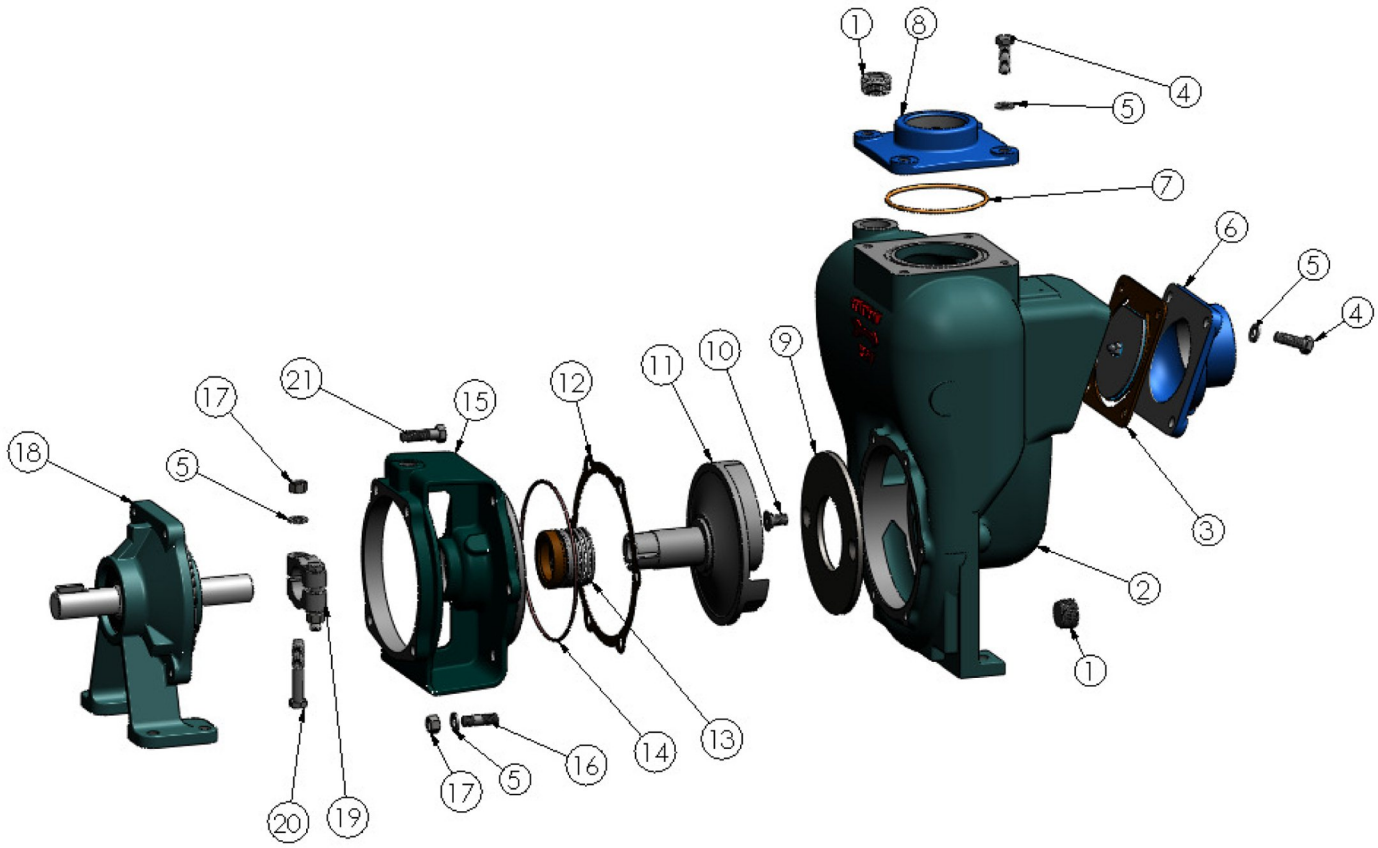

ITEM NO.	PART NO.	DESCRIPTION	QTY.		ITEM NO.	PART NO.	DESCRIPTION	QTY.
1	41481	PIPE PLUG C.I. - 3/4" NPT	2	*	12	22240	GASKET .O32 - NI-2085	1
2	22351	HOUSING C.I.	1	*	13	22361	SEAL ASSY 1.5 TYPE 21 - VITON	1
* 3	23040	FLAPPER ASSY. BUNA	1	*	14	29715	O RING - VITON	1
4	21291	CAPSCREW S.S. - 3/8-16 X 1.13	8		15	22348	ADAPTER C.I.	1
5	21266	LOCKWASHER S.S. - 3/8	4		16	21260	STUD 3/8-16 X 1.32 S.S.	6
6	22369	SUCTION FLANGE - C.I.	1		17	21268	HEXNUT S.S. - 3/8-16	8
* 7	37138	O RING	1		18	26163	PEDESTAL ASSY. C	1
8	22372	DISCHARGE FLANGE - C.I.	1		19	22356	CLAMP S.S. - 1"	2
* 9	22244	WEAR PLATE STEEL	1		20	21269	CAPSCREW S.S. - 3/8-16 X 2.25	2
10	37115	FLAT HD SCREW S.S. - 3/8-16	2		21	21259	CAPSCREW HEX HEAD S.S. - 3/8-16 X 1.38	4
11	23038	IMPELLER DUCTILE - 6.0 DIA.	1					

*RECOMMENDED REPLACEMENT PARTS

34800 BENNETT • FRASER, MI 48026-1686
(586) 293-8240 • FAX (586) 293-8469
(800) 563-8006 • www.mppumps.com