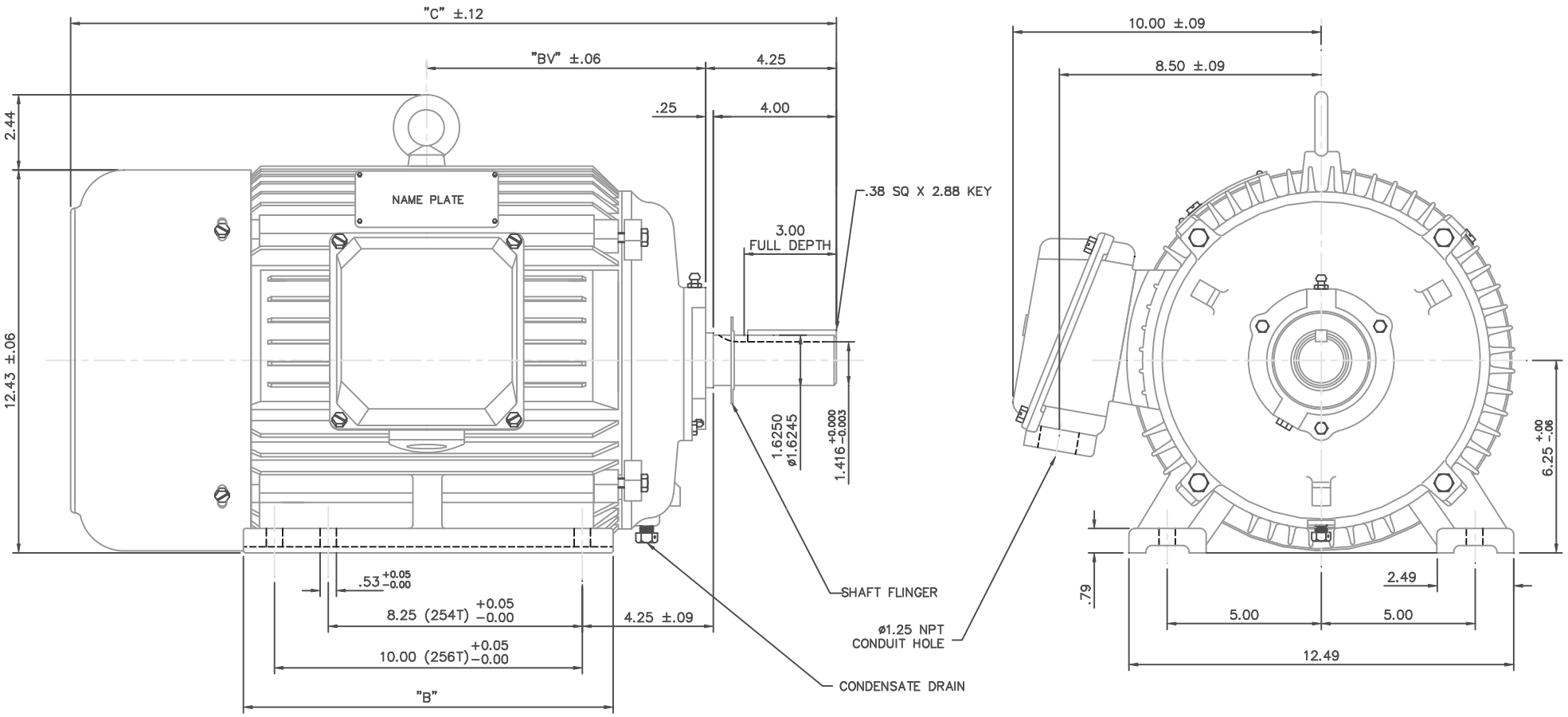

NOTE: 256T HAS 6 MTG. HOLES, USING BOTH 254T AND 256T "2F" LOCATIONS.

FRAME	"C"	"B"	"BV"
254T	23.19	10.25	8.19
256T	24.92	12.00	9.06

NO.	REVISION	BY & DATE	CH'K'D.
01	REDRAWN TO CURRENT CAD STANDARDS	CJK 8/3/01	

THIS DRAWING IN DESIGN AND DETAIL IS OUR PROPERTY AND MUST NOT BE USED EXCEPT IN CONNECTION WITH OUR WORK ALL RIGHTS OF DESIGN AND INVENTION ARE RESERVED
THIS IS AN ELECTRONICALLY GENERATED DOCUMENT – DO NOT SCALE THIS PRINT

TOLERANCES UNLESS OTHERWISE SPECIFIED		
DEC.	INCHES	METRIC
.X	±.1	±2.5
.XX	±.03	±.76
.XXX	±.005	±.127
.XXXX	±.0005	±.0127
FRACTIONS	±1/64	
ANGLES	±1/2°	

LEESON ELECTRIC CORPORATION

DRAWN DRZ 05/22/01	TITLE: OUTLINE – 250 FRAME TEFC – RIGID, NEW CON-BOX
APPR.	
R.F.P.	MAT'L.: CAST IRON
SCALE 5=16	
REF.	FINISH
FMF	REV. 01
	DRAWING NO. 169538-60