RBC PROPRIETARY AND CONFIDENTIAL INFORMATION
This document is the property of REGAL BELOIT CORPORATION ("RBC") including its subsidiaries and divisions and contains proprietary information of RBC. This document is loaned on the express condition that neither it nor the information contained therein shall be disclosed to others without the express written consent of RBC, and that the information shall be used by the recipient only as approved expressly by RBC. This document shall be returned to RBC upon its request. This document may be subject to certain restrictions under U.S. export control laws and regulations.

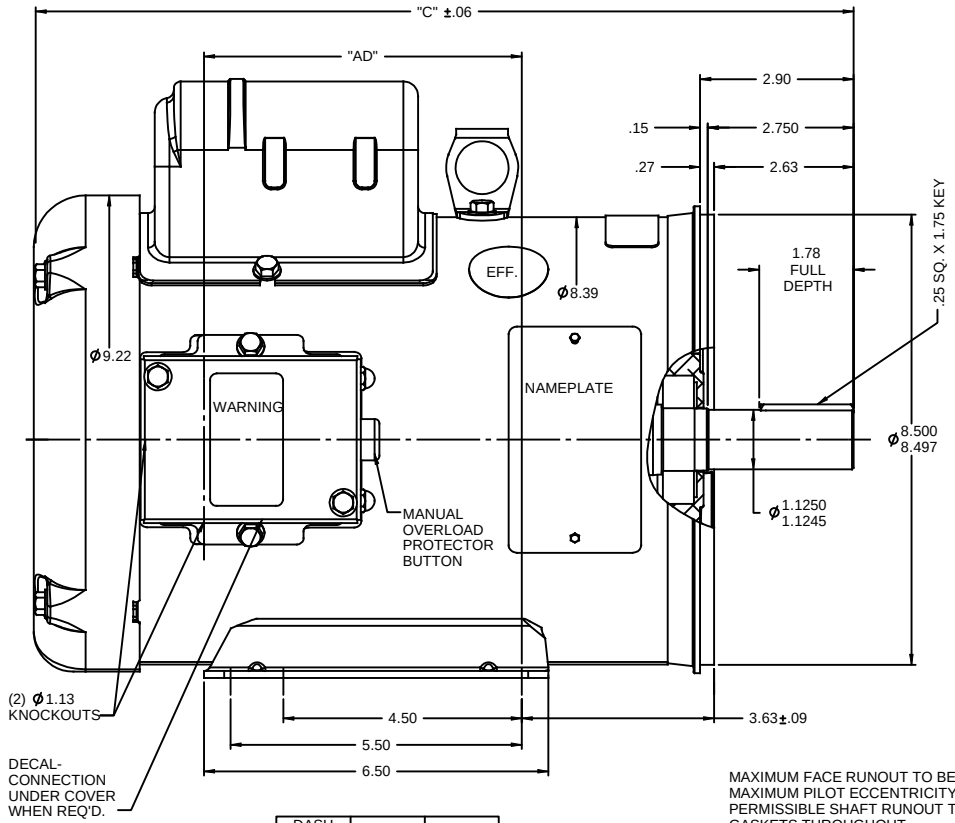

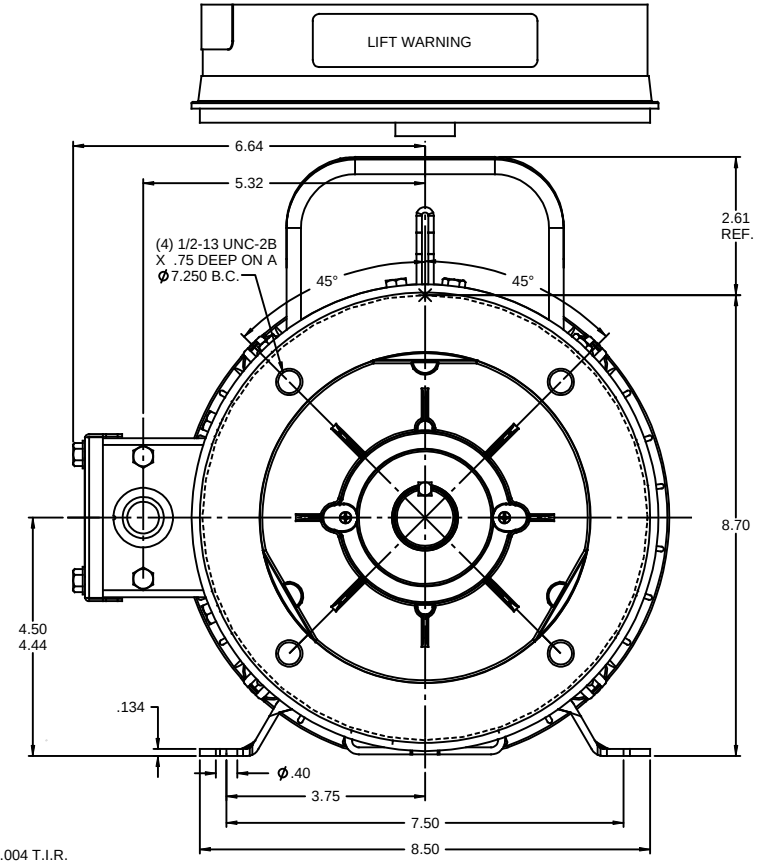

MAXIMUM FACE RUNOUT TO BE .004 T.I.R.
MAXIMUM PILOT ECCENTRICITY TO BE .004 T.I.R.
PERMISSIBLE SHAFT RUNOUT TO BE .002 T.I.R.
GASKETS THROUGHOUT

DASH NO.	"C"	"AD"
850	13.97	4.50
900	14.47	5.00
950	14.97	5.50
1000	15.47	6.00
1050	15.97	6.50
1100	16.47	7.00
1150	16.97	7.50
1200	17.47	8.00

NO	REVISION	BY & DATE
-	UPDATE & REDRAWN IN SOLIDWORKS	LST 11/12/2009

TOLERANCES UNLESS SPECIFIED
DEC INCHES
X ±.1
.XX ±.03
.XXX ±.005
.XXXX ±.0005
CHK ANG ±1/2°

THIRD ANGLE PROJECTION

REGAL-BELOIT CORPORATION

TITLE OUTLINE - 180TC FRAME
TEFC - "C" FACE - RIGID "C"
MAT'L W/ MANUAL PROTECTOR
FINISH

RFP
NETWORK FILE NAME
PREV

DRAWN PG 10/30/97
CHK RK 10/30/97
APPR
SCALE 1:2
REF 033178
FMF
PAGE OF

SIZE B
DRAWING NO 035381
REV -

RBC PROPRIETARY AND CONFIDENTIAL INFORMATION
This document is the property of REGAL BELOIT CORPORATION ("RBC") including its subsidiaries and divisions and contains proprietary information of RBC. This document is loaned on the express condition that neither it nor the information contained therein shall be disclosed to others without the express written consent of RBC, and that the information shall be used by the recipient only as approved expressly by RBC. This document shall be returned to RBC upon its request. This document may be subject to certain restrictions under U.S. export control laws and regulations.