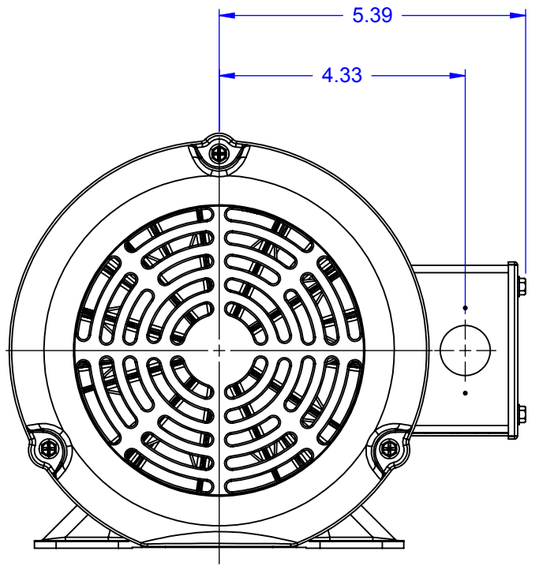

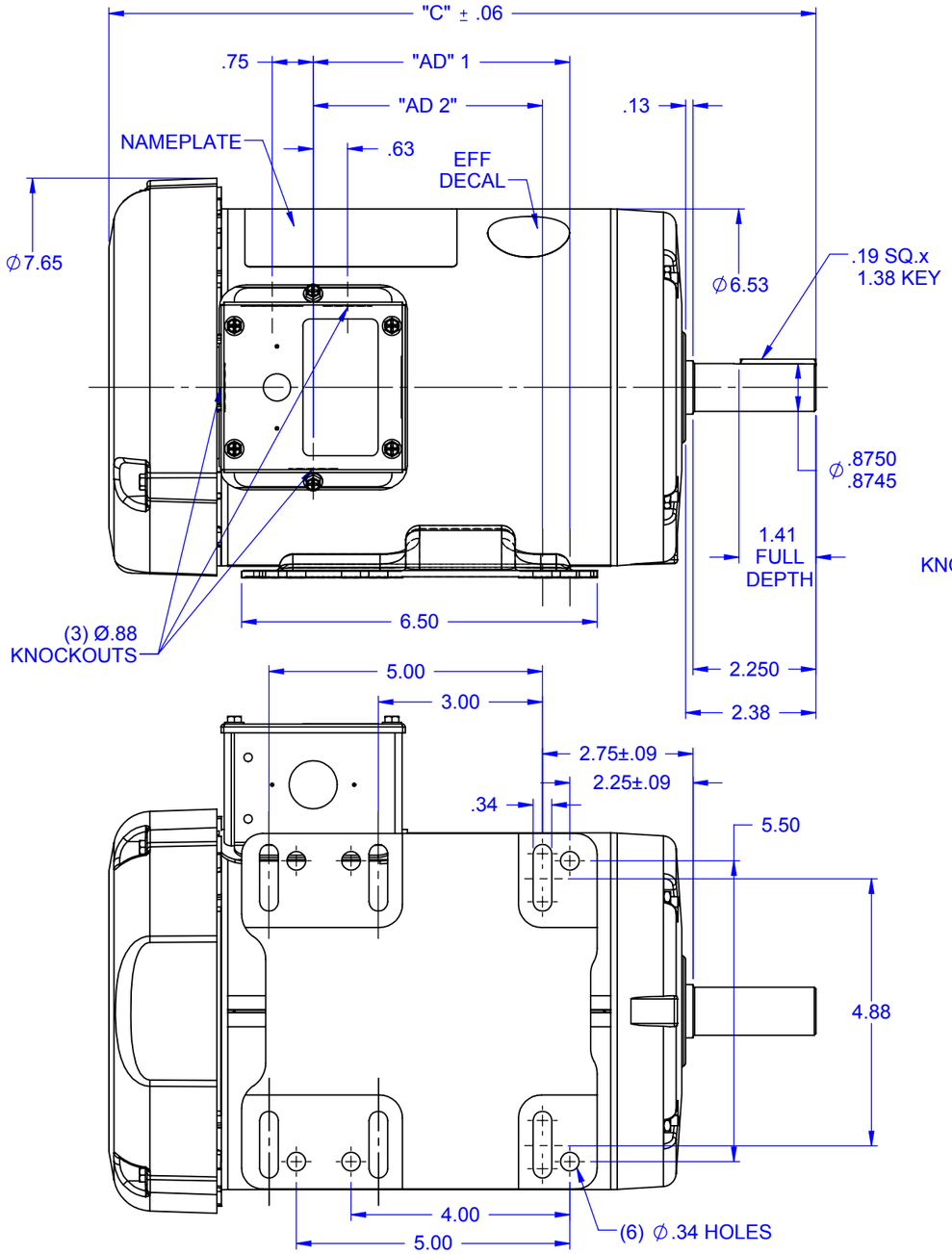

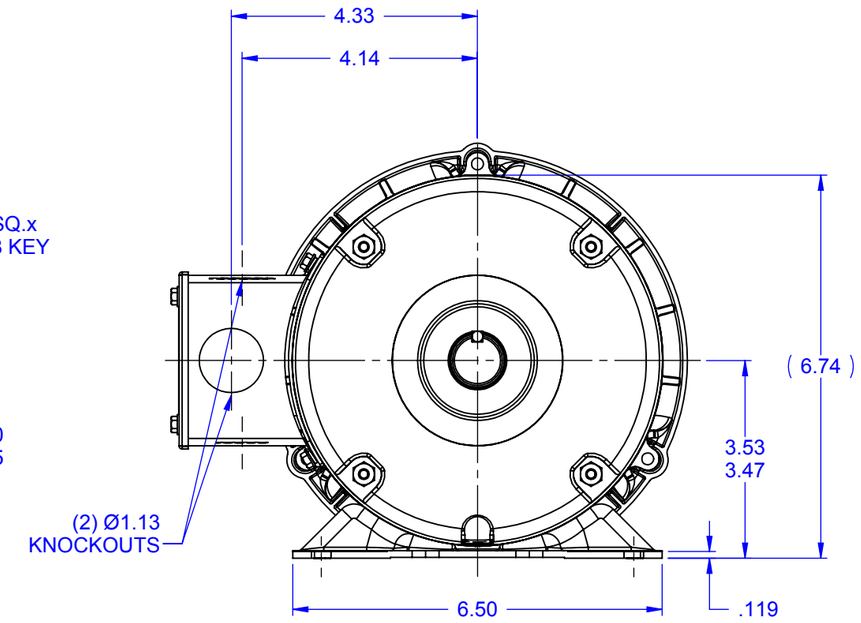

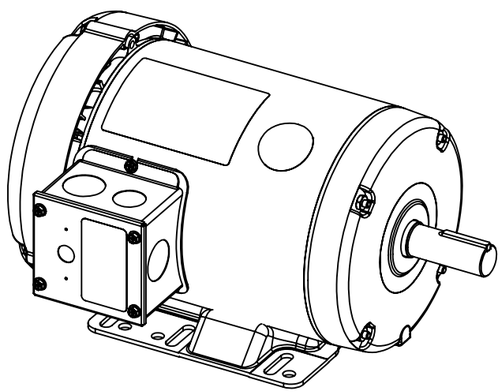

NOTE:
1) GASKETS THROUGHOUT

DASH NO.	"C"	"AD 1"	"AD 2"
600	11.93	3.69	3.19
650	12.43	4.19	3.69
675	12.68	4.44	3.94
700	12.93	4.69	4.19
725	13.18	4.94	4.44
750	13.43	5.19	4.69
800	13.93	5.69	5.19
850	14.43	6.19	5.69

NO	REVISION	BY & DATE	CHK
08	ADDED ITEM #725 (121095.00)	GRB 11/20/2008	DJ
07	ADDED DIMENSION FOR SHAFT DIA PER ISAAC 08-3501	RVD 8/19/2008	
06	ADDED ITEM#675 (G120015) AS PER ISAAC# 08-1990	GRB 7/17/2008	RVD
05	ADDED DIMENSIONS FOR 56HZ FRAME & -600	KMM 8/30/2007	
04	ADDED ITEM 650 (G120015.00)	KMM 8/25/2007	
03	SHAFT EXT. 2.250 WAS 2.25	KMM 7/30/2007	

TOLERANCES UNLESS SPECIFIED

DEC	INCHES
.X	±.1
.XX	±.03
.XXX	±.005
.XXXX	±.0005
ANG	±1/2°

LEESON ELECTRIC MOTORS GEARMOTORS AND DRIVES

TITLE OUTLINE - 140T/56HZ FRAME
TEFC - RIGID

MAT'L

FINISH GENERAL PURPOSE

RFP

PREV

NETWORK FILE NAME 028765

DRAWN	JJK 06/13/07
CHK	
APPR	
SCALE	3:8
REF	034941
FMF	G120016.99
PAGE	OF

THIRD ANGLE PROJECTION

SIZE	DRAWING NO	REV
B	028765	08

RBC PROPRIETARY AND CONFIDENTIAL INFORMATION
This document is the property of REGAL BELOIT CORPORATION ("RBC") including its subsidiaries and divisions and contains proprietary information of RBC. This document is loaned on the express condition that neither it nor the information contained therein shall be disclosed to others without the express written consent of RBC, and that the information shall be used by the recipient only as approved expressly by RBC. This document shall be returned to RBC upon its request. This document may be subject to certain restrictions under U.S. export control laws and regulations.