RBC PROPRIETARY AND CONFIDENTIAL INFORMATION
This document is the property of REGAL BELOIT CORPORATION ("RBC") including its subsidiaries and divisions and contains proprietary information of RBC. This document is loaned on the express condition that neither it nor the information contained therein shall be disclosed to others without the express written consent of RBC, and that the information shall be used by the recipient only as approved expressly by RBC. This document shall be returned to RBC upon its request. This document may be subject to certain restrictions under U.S. export control laws and regulations.

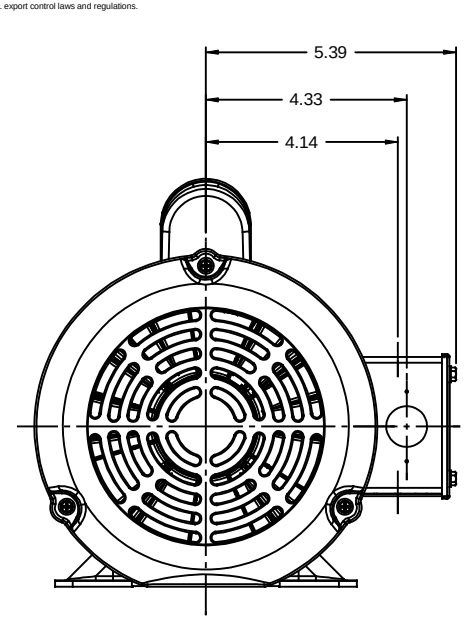

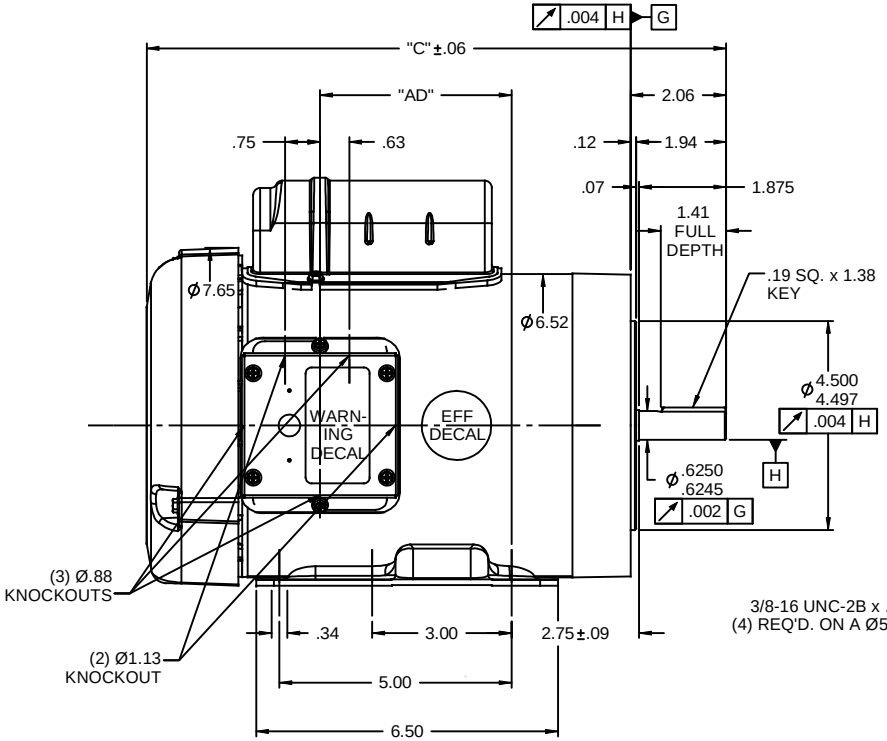

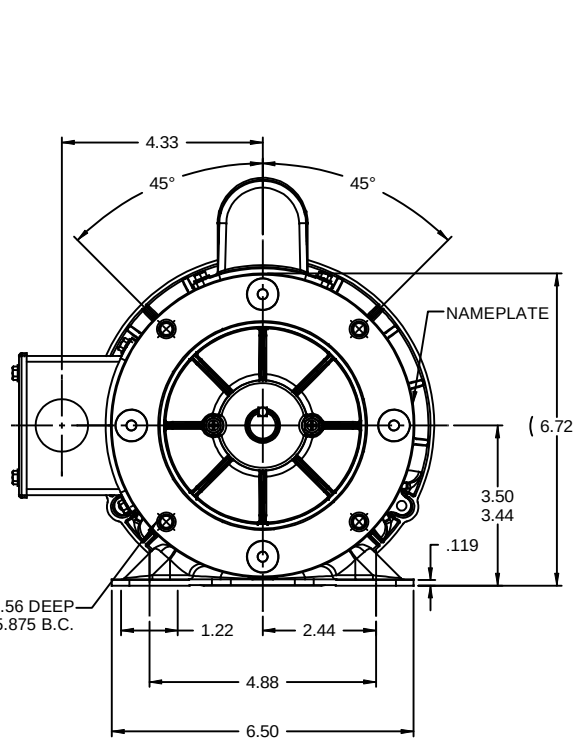

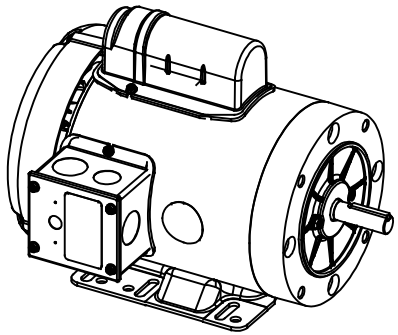

DASH NO.	"C"	"AD"
650	11.98	3.62
700	12.48	4.12
750	12.98	4.62
800	13.48	5.12
850	13.98	5.62

NOTES:
1) GASKETS THROUGHOUT

NO	REVISION	BY & DATE	CHK

TOLERANCES UNLESS SPECIFIED
DEC INCHES
.X ±.1
.XX ±.03
.XXX ±.005
.XXXX ±.0005
ANG ±1/2°

THIRD ANGLE PROJECTION

RFP 07/16/2008
NETWORK FILE NAME 028852

LEESON ELECTRIC MOTORS GEARMOTORS AND DRIVES

TITLE OUTLINE - 56C FRAME
TEFC - "C" FACE
MAT'L
FINISH

DRAWN GRB 07/16/2008
CHK DJ 07/16/2008
APPR
SCALE 3:8
REF 028851
FMF 113931.00
PAGE OF
PREV
SIZE B
DRAWING NO 028852
REV

6/25/2009 5:18:06 AM