005053-02

VIEW FROM OUTSIDE OF MOTOR AT SWITCH END.

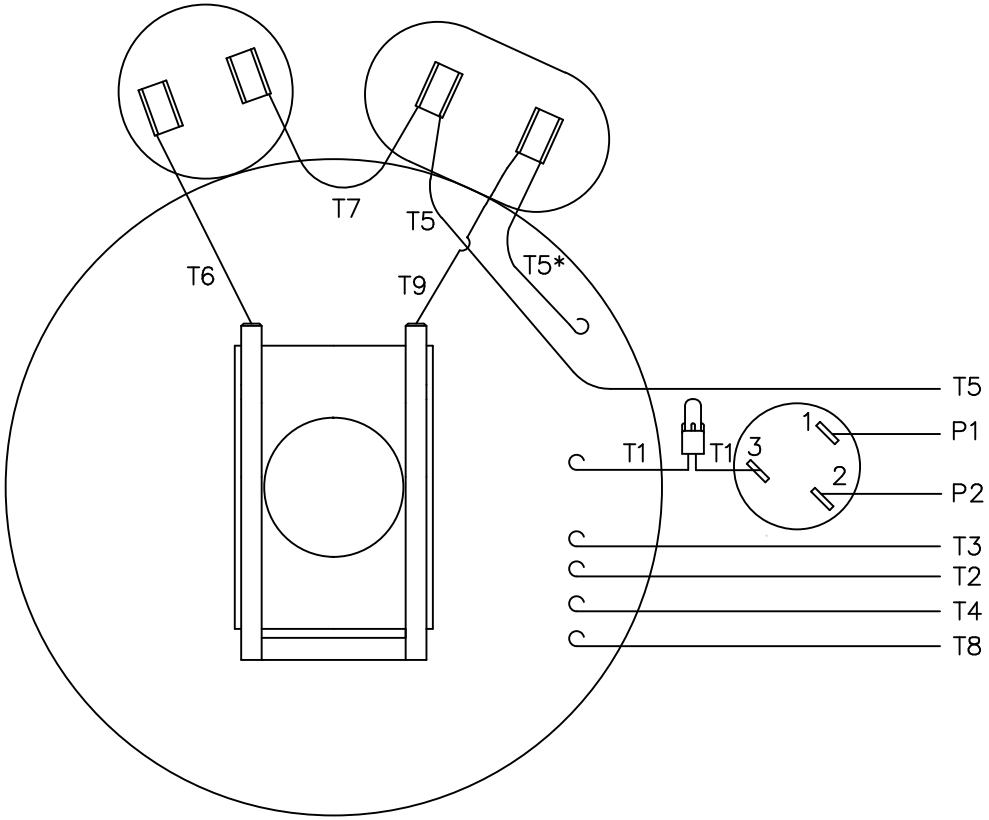

LINE LEADS

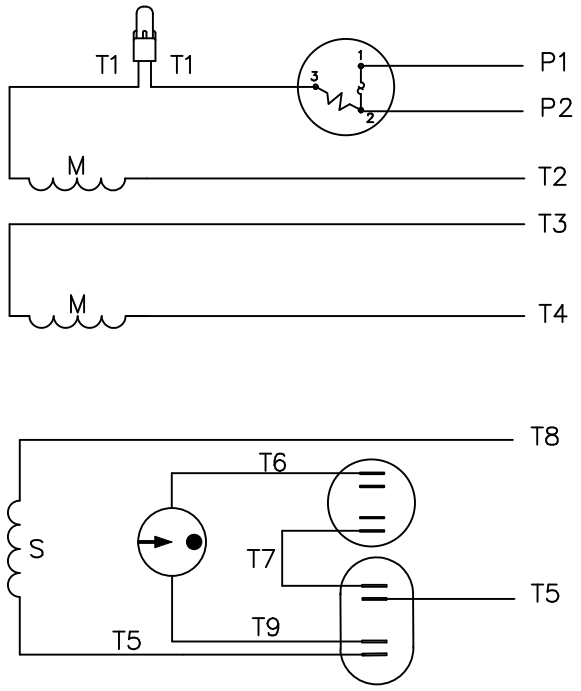

	ROTATION FACING LEAD END	L1	L2	JOIN	INSULATE SEPARATELY
HIGH VOLT	C.C.W.	P1	T4 T5	T2,T3 T8	P2
	C.W.	P1	T4 T8	T2,T3 T5	P2
LOW VOLT	C.C.W.	P1	T2,T4 T5	P2,T3 T8	------
	C.W.	P1	T2,T4 T8	P2,T3 T5	------

* THIS LEAD MAY BE WHITE

NO.	REVISION	BY & DATE	CHK
04	ADDED "*" TO T5	RLW 7/22/02	
03	REDRAWN ON CAD	DBT 05/27/97	

TOLERANCES UNLESS SPECIFIED

DEC.	INCHES
.X	±.1
.XX	±.01
.XXX	±.005
.XXXX	±.0005
ANG	±1/2°

REGAL-BELOIT Motor Technologies Group

TITLE: EXTERNAL WIRING DIAGRAM TYPE "K" W/PROTECTOR

MAT'L. DECAL 004011

FINISH

CAD FILE 00505302

RFP

DIST

DRAWN	ADH 06/16/76
CHK	WRK 06/30/76
APPD	
SCALE	1=1
REF	
FMF	6K17FB8A
PREV	

SIZE A | DRAWING NO. 005053-02 | REV. 04

THIS DRAWING IN DESIGN AND DETAIL IS OUR PROPERTY AND MUST NOT BE USED EXCEPT IN CONNECTION WITH OUR WORK ALL RIGHTS OF DESIGN AND INVENTION ARE RESERVED
THIS IS AN ELECTRONICALLY GENERATED DOCUMENT – DO NOT SCALE THIS PRINT

6/28/2007 5:11:39 PM -