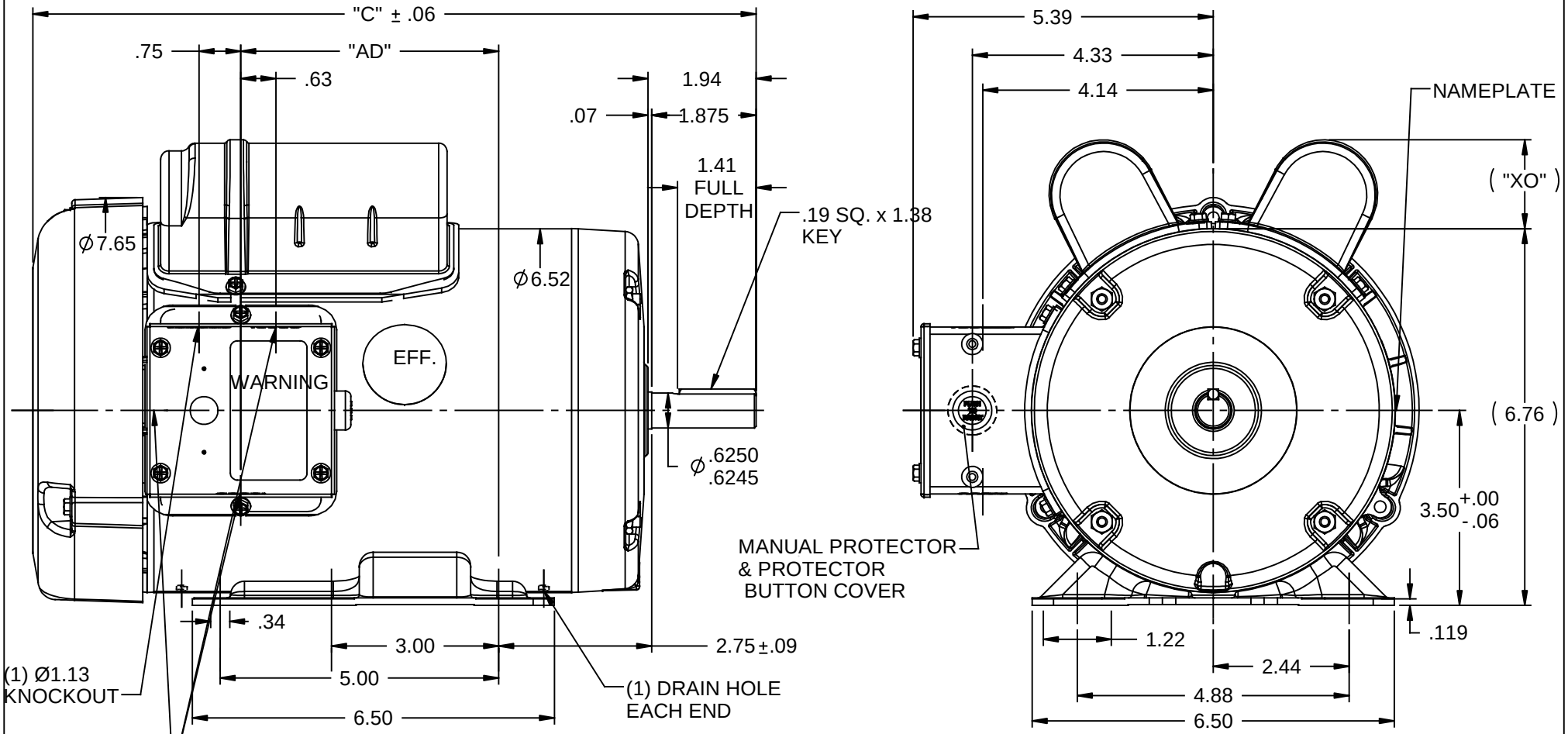

DASH NO.	"C"	"AD"
700	12.49	4.13
750	12.99	4.63
800	13.49	5.13
850	13.99	5.63

CAP DASH	"XO"
A	1.15
B	1.60
C	1.82

NOTES:
1) GASKETS THROUGHOUT.
2) DRAIN HOLE IN FRAME (BOTH ENDS).

RBC PROPRIETARY AND CONFIDENTIAL INFORMATION
This document is the property of REGAL BELOIT CORPORATION ("RBC") including its subsidiaries and divisions and contains proprietary information of RBC. This document is loaned on the express condition that neither it nor the information contained therein shall be disclosed to others without the express written consent of RBC, and that the information shall be used by the recipient only as approved expressly by RBC. This document shall be returned to RBC upon its request. This document may be subject to certain restrictions under U.S. export control laws and regulations.

NO	REVISION	BY & DATE	CHK

TOLERANCES UNLESS SPECIFIED
DEC INCHES
.X ±.1
.XX ±.03
.XXX ±.005
.XXXX ±.0005
ANG ±1/2°

LEESON ELECTRIC MOTORS GEARMOTORS AND DRIVES

TITLE OUTLINE - 56H FRAME
TEFC - RIGID

MAT'L
FINISH
RFP
PREV
NETWORK FILE NAME

DRAWN KMM 10/03/07
CHK
APPR
SCALE 3:8
REF OL113333
FMF 113333.00
PAGE OF

THIRD ANGLE PROJECTION

SIZE A
DRAWING NO 028802
REV

5/18/2010 2:07:02 PM