A Trusted Name . . . Quality you Deserve! **FILL-RITE**

PUMP REPAIR KIT INSTALLATION INSTRUCTIONS
BIODIESEL PUMPS SERIES BD700

Installation of repair kit no. BD700KTH0711

1. Disconnect power to pump motor.
2. Remove pump from inlet casting (item A) and meter or outlet fitting if practical.
3. Remove rotor cover and rotor cover gasket (item 1).
4. Remove rotor (item 2), vanes (item 3) and rotor key (item 4).
5. Remove seal assembly, bypass valve, strainer and check valve components.
6. Blow out and clean any foreign particles from the pump housing.
7. Refer to instructions on seal assembly package for replacement of seal assembly (item 5).
8. Slide rotor back onto motor shaft
9. Place vanes in rotor. Note that the grooved side of vane is trailing in rotation. (See diagram).
10. Aligning groove in rotor to slot in shaft and replace rotor key (item 4).
11. Install new cover gasket (item 1) and rotor cover (item 12).
12. Install new strainer gasket (item 10) and replace strainer and cover.
13. Replace bypass valve (item 9) cap using new bypass gasket (item 6).
14. Using new gaskets (items 7, 8, 11), place check valve (item B) in pump and reinstall pump to inlet casting and meter or outlet fitting.

PART NO. BD700KTH0711			
Item No.	Part No.	Description	Qty.
1		O-ring Fluorocarbon	1
2		Rotor	1
3		Vane - Carbon	8
4		Rotor Key	1
5	KIT700SL	Seal Assembly kit	1
6		O-ring Fluorocarbon	1
7		O-ring Fluorocarbon	1
8		O-ring Fluorocarbon	1
9		Bypass Valve	1
10		O-ring Fluorocarbon	1
11		O-ring Fluorocarbon	1
12		Rotor Cover	1
13		Screw 3/8-16 1”	2

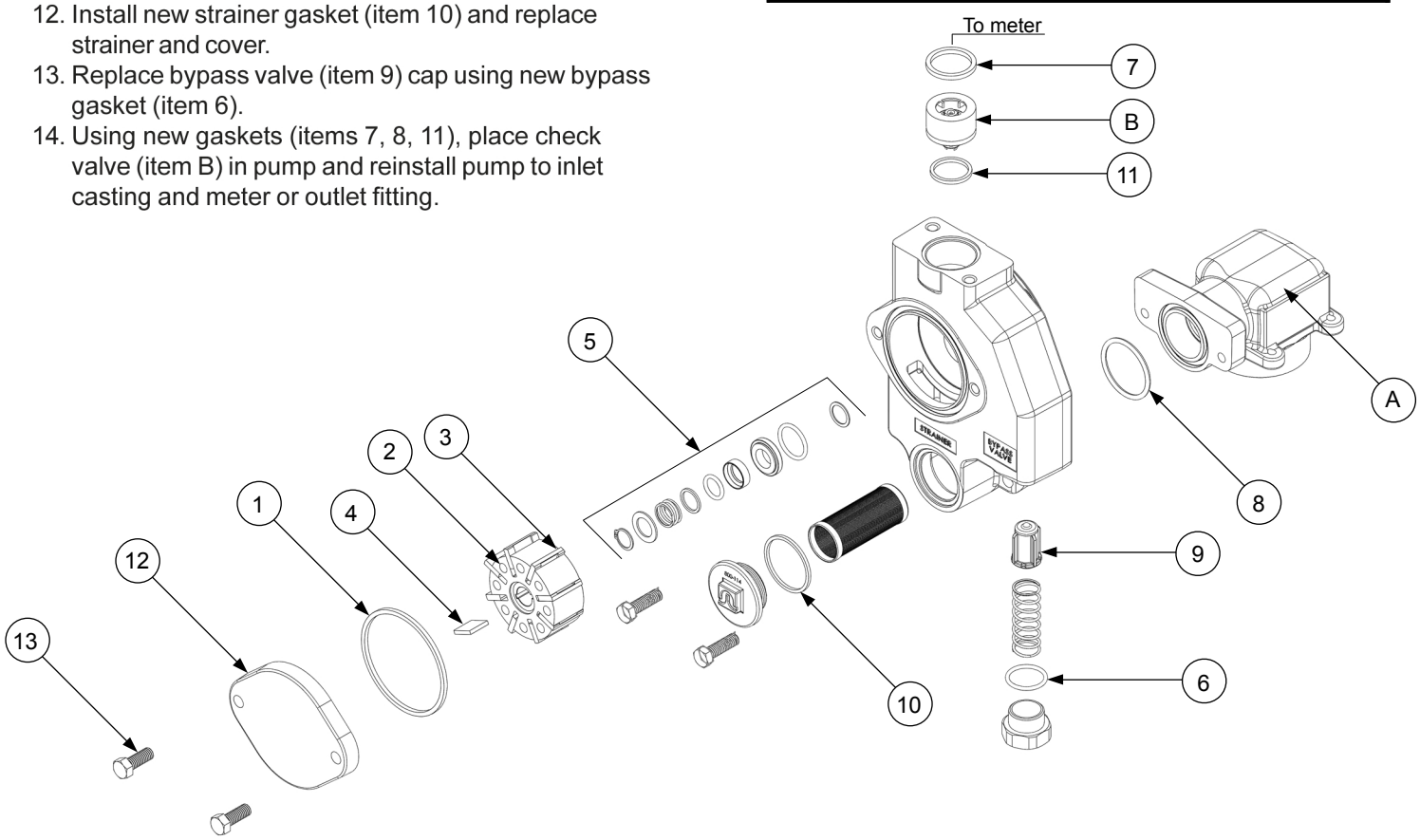

Tuthill
8825 Aviation Drive
Fort Wayne, Indiana USA 46809
Tel 260 747-7524 Fax 260 747-3159
www.tuthill.com

700H0725 REV. 2
5/22/2013