

WILDEN®

Where Innovation Flows

Saniflo™ Series Solutions

As the global leader in sanitary, hygienic and biopharmaceutical air-operated double-diaphragm (AODD) pumps, Wilden® offers a wide range of solutions for food, beverage, dairy and personal care applications. These solutions – which include Saniflo™ Hygienic Series (HS) and Saniflo™ FDA Series pumps – have been engineered to meet or exceed the highest standards and requirements in the industry, including 3-A, FDA CFR 21.177, 1935/2004/EC, USP Class VI*, ATEX, and CE.

Wilden Saniflo Series pumps have the versatility you require, the safety you need, and the capability of efficiently pumping an array of viscosities, solids and shear-sensitive products. They are offered with passivated stainless-steel components and are available in multiple sizes and with various surface finishes. All Saniflo Series pumps have clamped connections for easy assembly and disassembly, and clean-in-place (CIP)** and clean-out-of-place (COP) capabilities.

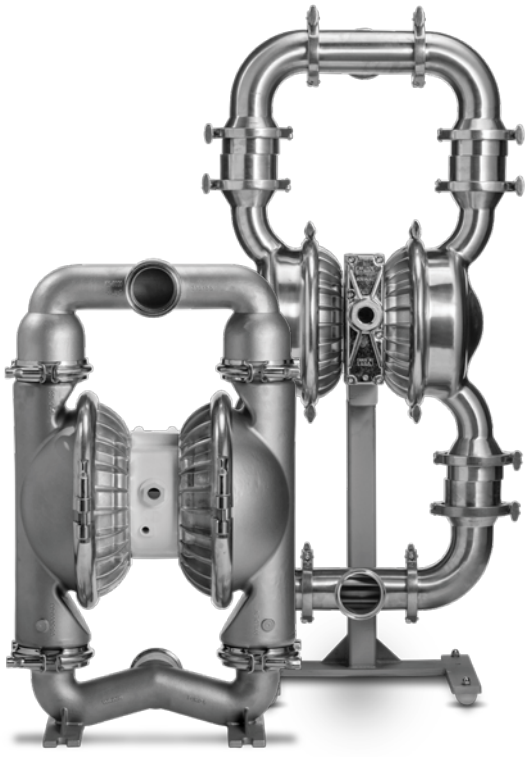

*USP Class VI certification available only on Saniflo HS pumps with PTFE elastomer options
**Saniflo HS pumps only



FOOD AND BEVERAGE



PREPARED FOOD AND SAUCES



POULTRY AND DAIRY



SWEETENERS AND ACIDS



PHARMACEUTICAL AND COSMETICS



Wilden Pumps vs. Competing Technologies

AODD Pumps

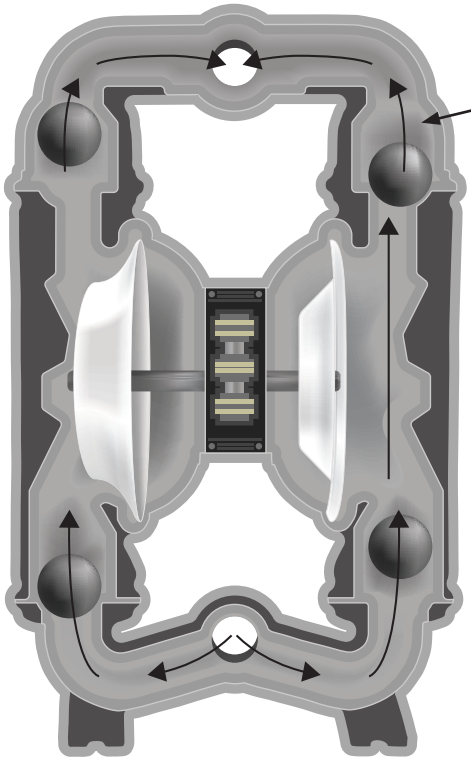

Wilden pumps use air pressure and suction to delicately move liquids and solids. Thanks to this unique operating principle, AODD pumps excel in a wide variety of hygienic applications and incorporate numerous features and benefits.

- Self priming
- Shear sensitive
- High vacuum
- Superior product containment

Saniflo HS Pumps and Shear Sensitivity

Wilden HS pumps provide delicate, shear-sensitive operation and gently transfer products. AODD pumps are among the safest and gentlest because the fluid is simply drawn into a chamber and then pushed out with no contact to moving parts. This low-shear operation ensures product quality is not damaged or compromised, resulting in the proper transfer of critical high-value fluids and materials.



With Shear-Sensitive Operation

Competing Technologies Not Shear Sensitive

Lobe

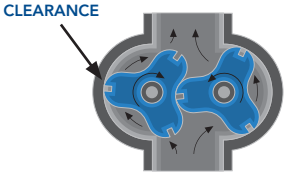

- Less mechanically effective
- Unable to strip lines
- Higher product shear
- Reduced flow capacity

Centrifugal

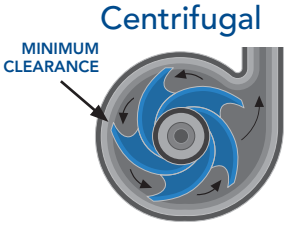

- Not self-priming
- Difficulty handling higher-viscosity liquids
- Utilize mechanical seals that can lead to costly leaks



Without Shear-Sensitive Operation

Wilden Saniflo™ Hygienic Series Pumps: One-Of-A-Kind Design

The unique design of Wilden Saniflo HS pumps incorporates a free-draining flow path that optimizes performance and enables CIP capability while lowering the risk of cross contamination or compromised finished product that may lead to costly recalls. CIP is critical to hygienic-process success because it eliminates the need to disassemble the equipment to properly clean the pump, which costs the end user time and money between runs.

Free-Draining Flow Path

Saniflo HS have been specifically designed for superior drainability thanks to the free-draining flow path. The pumps can quickly and easily be drained without the need to disassemble the pump.

With these state-of-the-art design features that help simplify cleaning, HS pumps are the only US-manufactured pumps in the industry to have earned 3A certifications for CIP operations.

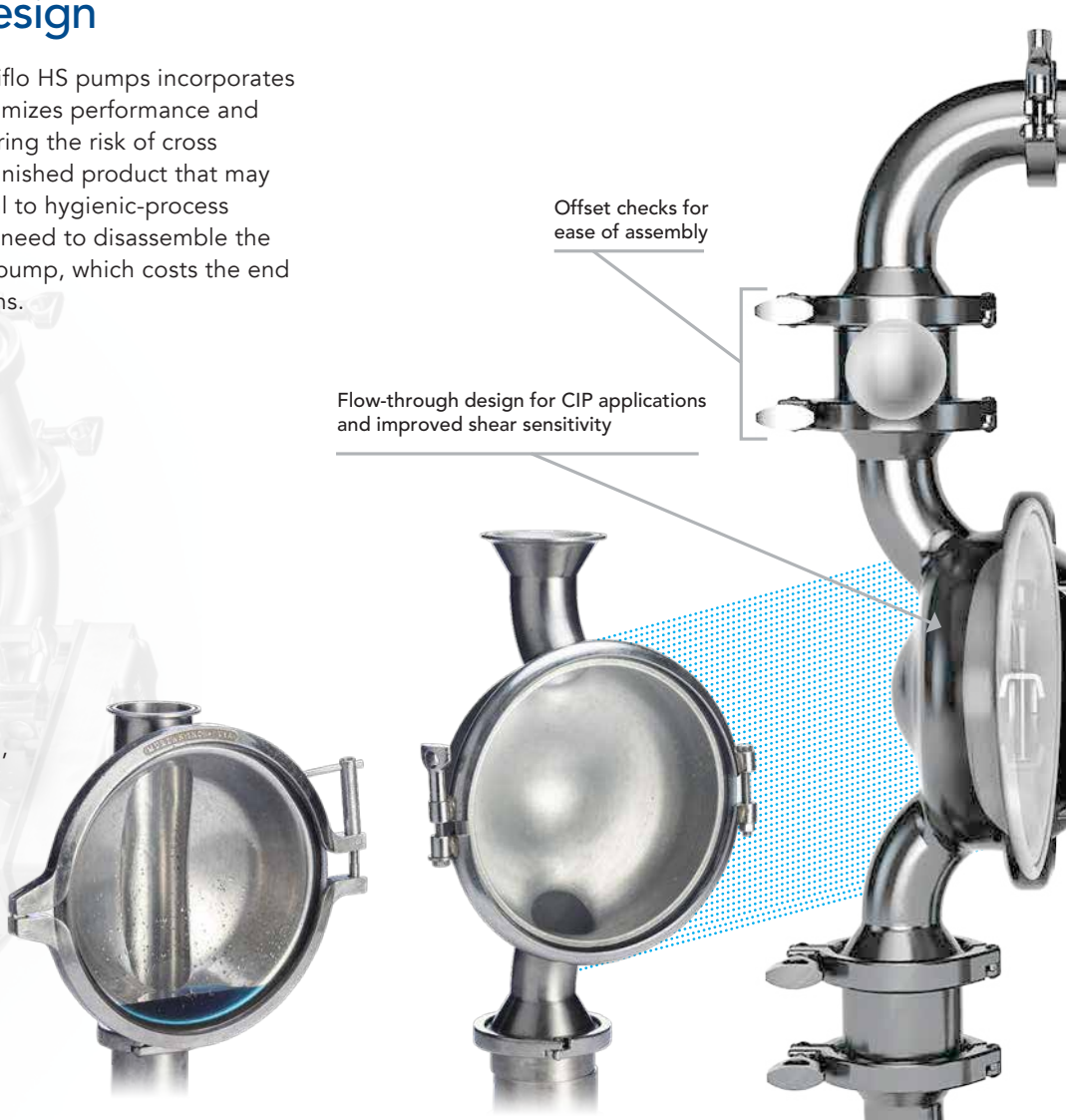

Competitor
Catch area for product to settle in flow path

Wilden
Product completely drains from flow path

Tri-Clamp®

Pump performance can be further optimized through the use of patented Tri-clamp®-style fittings that have been designed with an eccentric cartridge check valve assembly, allowing for ease of maintenance by ensuring liquid chambers and pump manifold alignment. HS pumps also feature wash-friendly clamp bands with wetted path material of 316L stainless steel with an Ra 0.8 µm (32 µ-in) interior polish for ease of cleaning. DIN and SMS connections also available.



Tri-Clamp®

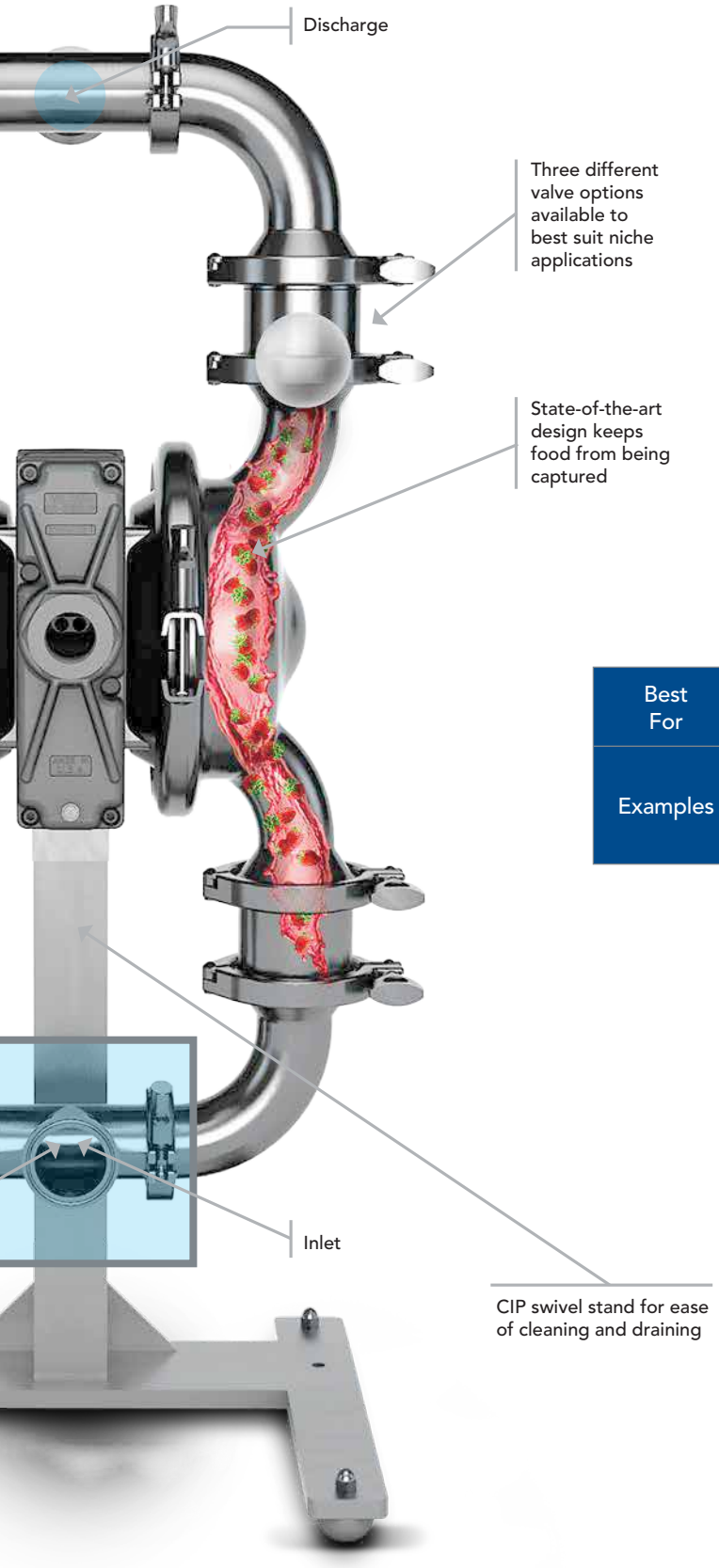

Saniflo HS Valve Options

Most Saniflo HS pumps come standard with ball valves, but other valve types, including flap and mushroom styles, are available for use in niche applications. These applications can include those that require the transfer of fluids with especially large solids or those that contain some level of entrained gas or vapor.

	Ball Valve	Flap Valve	Mushroom Valve
			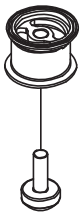
Best For	Shear Sensitive Items	Large Solids	Viscous Products
Examples	Noodles Fruit preserves Grapes for wine Salsa	Poultry Eggs Meat Products Waste	Peanut butter Molasses Ketchup Gels and creams



CIP Stand

For ease of maintenance and cleaning, Wilden offers an optional swivel pump to be drained by rotating the pump so that the fluid can flow out of the discharge and into a suitable container. The swivel stand also permits the pump to be drained without disassembly.

Wilden Saniflo™ FDA Series Pumps

Wilden FDA Series pumps not only possess the versatility to safely and efficiently pump a wide range of viscosities and shear-sensitive products, they are available in various materials of construction that meet strict FDA guidelines established for sanitary process applications. FDA Series pumps comply with all FDA, CE, 1935/2004/EC and ATEX requirements.

These pumps ensure reliability and ease of use and maintenance by COP capabilities. With simple installation and robust durability, FDA Series pumps incorporate a straight flow-through design, large solids passage, Tri-clamp-style fittings and efficiencies to ensure process success. The wetted path material is 316 stainless steel with Ra 5.1 µm (200 µ-in) surface finish for ease of cleaning.

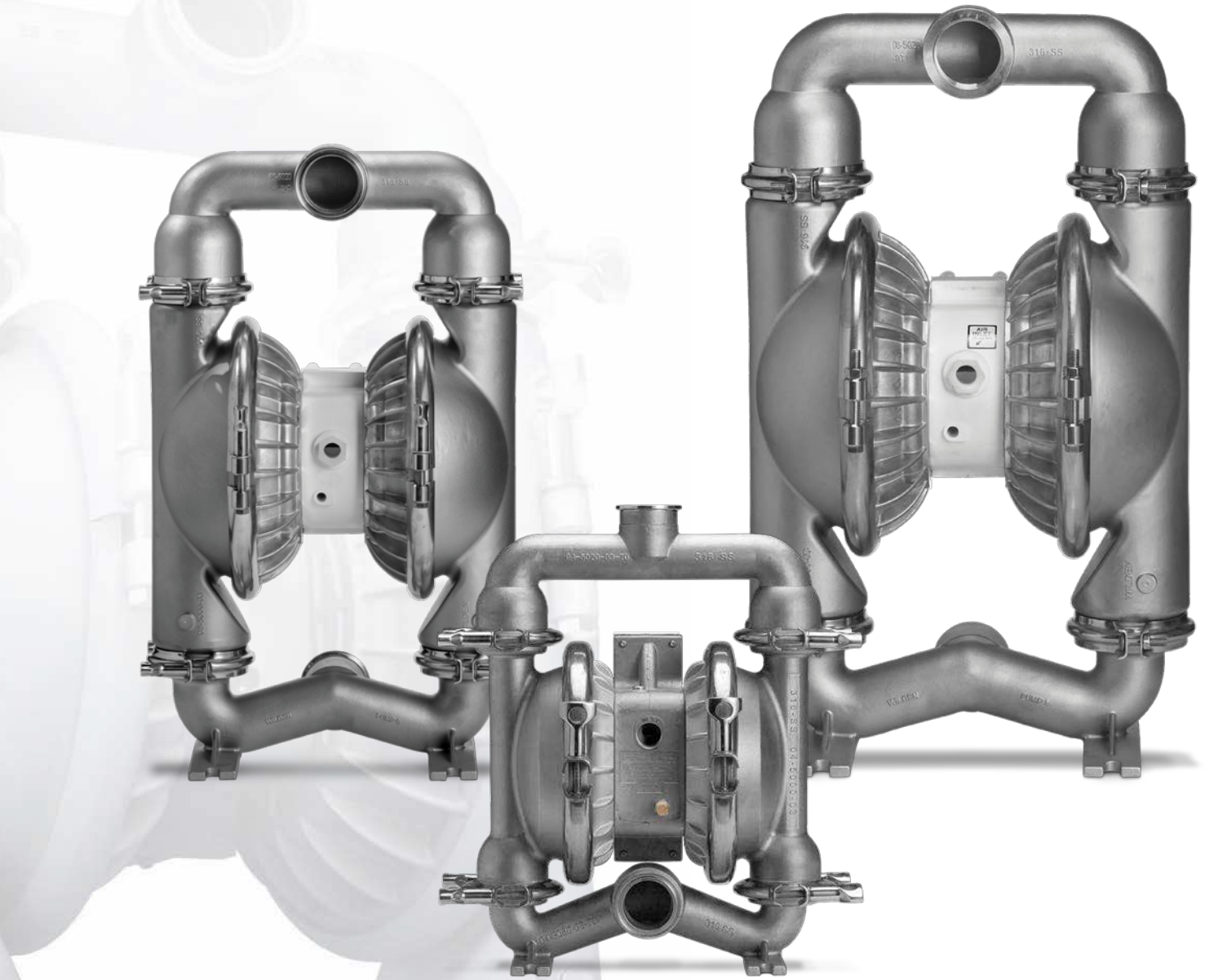

Pump Selection Guide for Sanitary and Hygienic Applications



	PUMP LIQUID INLET	AIR DISTRIBUTION SYSTEM	CLEANING METHOD	SANITARY APPLICATION RANGE	PRODUCT EXAMPLE	POLISH LEVELS Ra µ-m (µ-inch)	CERTIFICATIONS
 **Saniflo HS**	• 25 mm (1") • 38 mm (1-1/2") • 51 mm (2") • 76 mm (3")	Pro-Flo SHIFT	CIP/COP	Low Acid, Pasteurized & Protein-Based Products	• Milk • Meat • Egg • Vegetable-Based Products • Personal Care Products	Ra 0.8 µm (32 µ-in)	FDA, USP CLASS VI, CE, Ex
 **Saniflo High Pressure**	• 76 mm (3")	High Pressure	CIP/COP	Cosmetics, Viscous Products	• Creams • Shampoo • Soaps • Lotion	Ra 0.8 µm (32 µ-in)	FDA, USP CLASS VI, CE
 **Saniflo HS (Pharma) *RR Only**	• 38 mm (1-1/2") • 51 mm (2") • 76 mm (3")	Pro-Flo SHIFT	CIP/COP	Biopharmaceutical Sterile Process	• Active Pharmaceutical Ingredients • Cosmetics • Live Cultures	Ra 0.4 µm (20 µ-in)	FDA, USP CLASS VI, CE, Ex
 **Saniflo FDA**	• 25 mm (1") • 38 mm (1-1/2") • 51 mm (2") • 76 mm (3")	Pro-Flo & Pro-Flo SHIFT	COP	High Acid, High Sugar, High Fat Food	• Sweeteners • Icings • Juices • Fruit Ingredients • Some Sauces	Ra 5.1 µm (200 µ-in)	FDA, CE, Ex
 **Stallion & Brahma**	• 38 mm (1-1/2")* • 51 mm (2") • 76 mm (3")	Pro-Flo SHIFT	N/A	Non-Sanitary Waste	• Process Wastes • Large Solid	N/A	CE, Ex
 **Bolted Plastic**	• 6 mm (1/4") • 13 mm (1/2") • 25 mm (1") • 38 mm (1-1/2") • 51 mm (2") • 76 mm (3")	Pro-Flo & Pro-Flo SHIFT	N/A	Non-Sanitary Waste, Chemical Cleaning Process	• CIP Chemicals	N/A	CE

* Stallion Only

Progressive Diaphragm Technology

PURE-FUSE DIAPHRAGMS

Pure-Fuse Integral Piston Diaphragms are the ideal solution for food and pharmaceutical applications. Pure-Fuse integral piston one piece design that that eliminates trap areas between the outer piston and the diaphragm. This design also eliminates the normal abrasive wear caused by the outer piston in a conventional conguration, resulting in a longer lasting diaphragm. Additionally, Pure-Fuse offers clean-in-place (CIP) capability, superior flow and suction lift over competitor IPDs.

- Up to 100% increased flow and suction lift compared to PTFE laminate diaphragms
- Eliminates trap aareas between outer piston and diaphragm where bacteria can grow
- Eliminates normal abrasive wear caused by the outer piston in a conventional configuration, resulting in longer diaphragm life
- Easy cleanability for faster changeovers between product
- Up to 50% price reduction compared to PTFE laminate diaphragms
- No adhesive used in the diaphragm construction unlike competitive one-piece diaphragms
- Sanitary materials meet FDA CFR 21.177, 3-A requirements, and 1935/2004/EC*

STANDARD DIAPHRAGM

GOOD

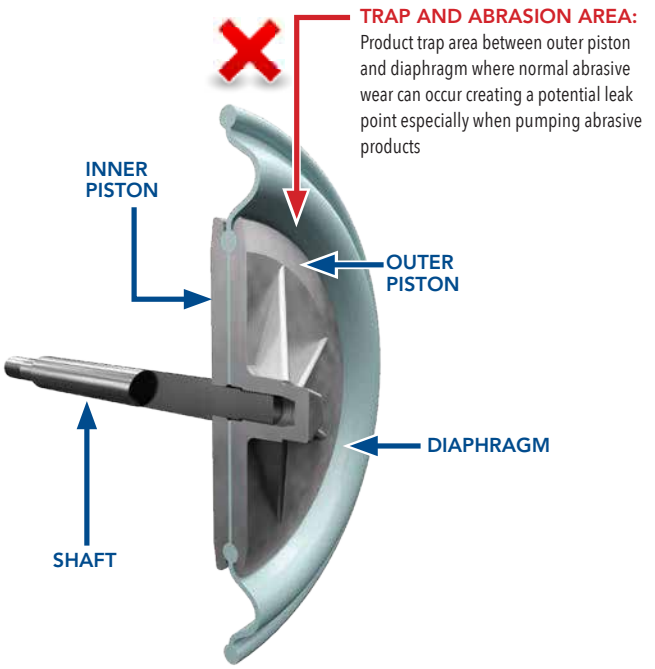

PURE-FUSE DIAPHRAGM

BEST

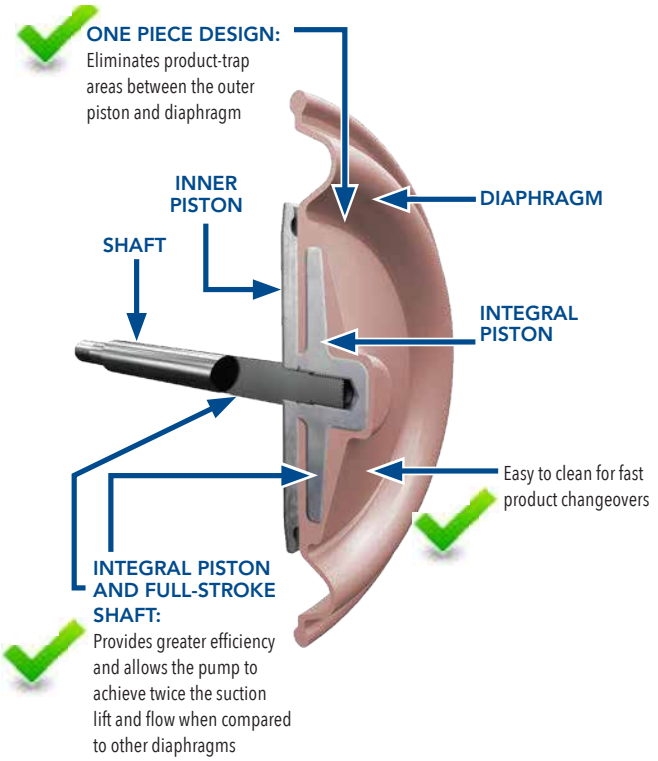

THERMOPLASTIC (TPE) DIAPHRAGMS

TPE diaphragms are durable, low cost and cooperate over a wide temperature range.

Wilden TPE diaphragm options include Wil-Flex™ and Saniflex™. These diaphragms are injection-molded of man-made elements and have inherent tensile strength without the need for fabric reinforcement.

Versions of Wil-Flex and Saniflex are available that comply with FDA CFR 21.177 standards for food and beverage applications.

PTFE DIAPHRAGMS

Wilden PTFE diaphragms feature a full-stroke or a reduced-stroke design depending on required performance. PTFE complies with FDA CFR 21.177 and USP Class VI standards for food, beverage and pharmaceutical applications. Because PTFE is non-elastic, a backup diaphragm of a different material must be used to provide flexibility and memory. Material options for backup diaphragms include Wil-Flex, Saniflex, Neoprene and high temperature Buna-N.

Hygienic/Sanitary Accessories

SURGE DAMPENERS

Wilden Equalizer® Surge Dampeners, Hygienic SD Series, minimize unwanted pressure fluctuations by providing a supplementary pumping action to virtually eliminate pressure variation and pulsation on AODD pumps. The Equalizer automatically sets and maintains the correct air pressure matching the variations in liquid flow or discharge pressure generated by the pump. They meet FDA, EHEDG, and USP Class VI standards when configured with PTFE integral-piston diaphragms. They also meet ATEX requirements for use in explosive environments. Available in 38 mm (1-1/2"), 51 mm (2"), and 76 mm (3") sizes.



ELECTRONIC ACCESSORIES

Wil-Gard™: Detects and notifies plant personnel when a diaphragm has ruptured to prevent further damage to pump.

Pump Cycle Monitor (PCMI): Counts pump cycles by sensing the presence of the air valve spool.



REPAIR AND RETROFIT KITS

Wilden wet and air repair kits for AODD pumps have been designed to help properly maintain the health and performance of your Wilden pump.

Always use only authentic Wilden air kits and wet kits when repairing or maintaining your Wilden products to preserve optimal performance and factory warranties.

- Easily order online at your convenience
- Kits are maintained and shipped in sealed packaging
- Include all necessary components for repair and maintenance

Wilden also offers retrofit kits which allow you to upgrade your existing pumps. Other spare parts outside of the traditional repair kits are available upon request.



Pro-Flo® SHIFT Air Distribution System

The Wilden Pro-Flo SHIFT is the premier air distribution system. The innovative, yet simple, Pro-Flo SHIFT design features an air control spool that automatically optimizes air consumption and eliminates the overcharging of the air chamber with no reduction in flow rate. This results in a reduction of air consumption and operational costs while maintaining maximum operational efficiency and volumetric consistency.

- Fewer operating parts, meaning less downtime and simplified maintenances
- Delivers more yield per SCFM versus competitive AODD pumps
- Longer diaphragm life
- Quiet operation

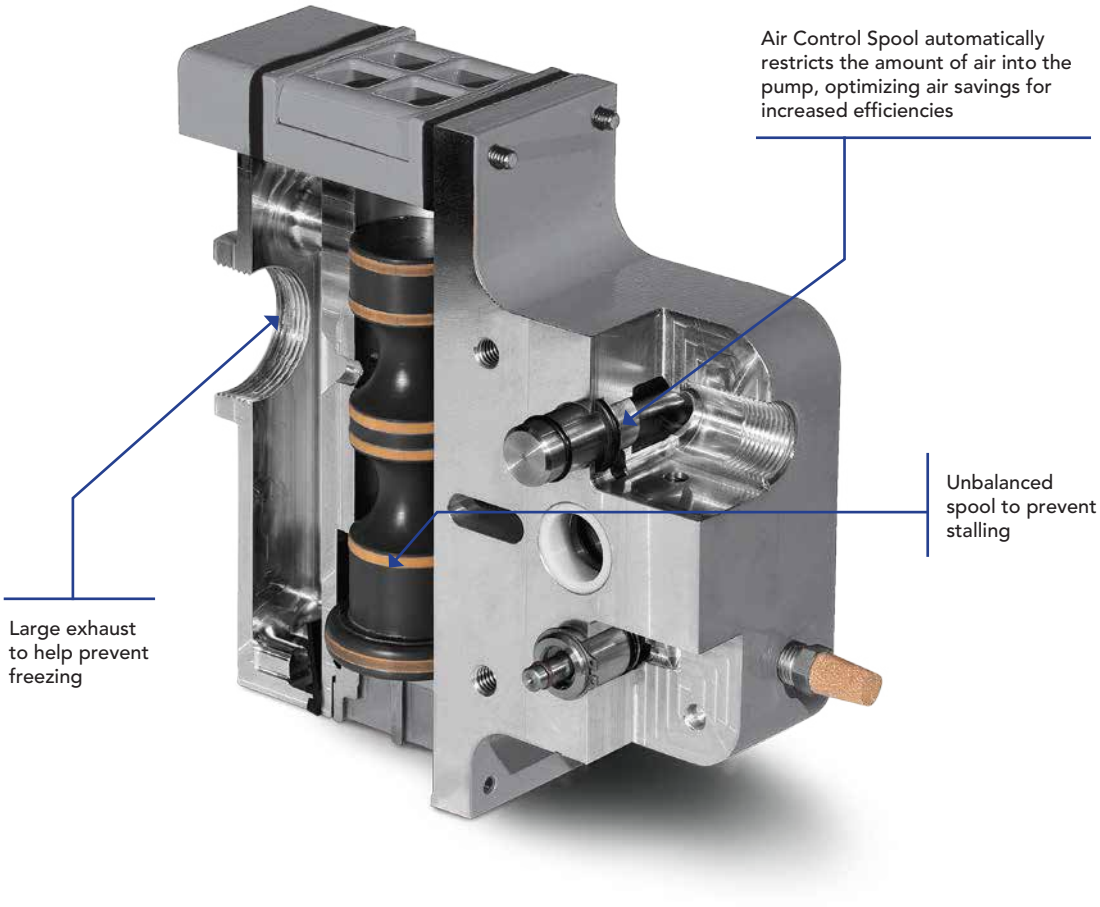

CE



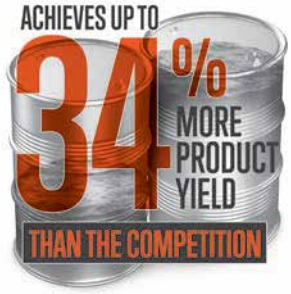



Pro-Flo® Air Distribution System

The secret to the success of Pro-Flo Series pumps is the incorporation of a simple and durable Air Distribution System (ADS) that features a plastic center block and lube-free operation. The patented Pro-Flo ADS incorporates three moving parts: the unbalanced air valve spool, the pilot spool and the main shaft/diaphragm assembly for simplicity and high reliability.

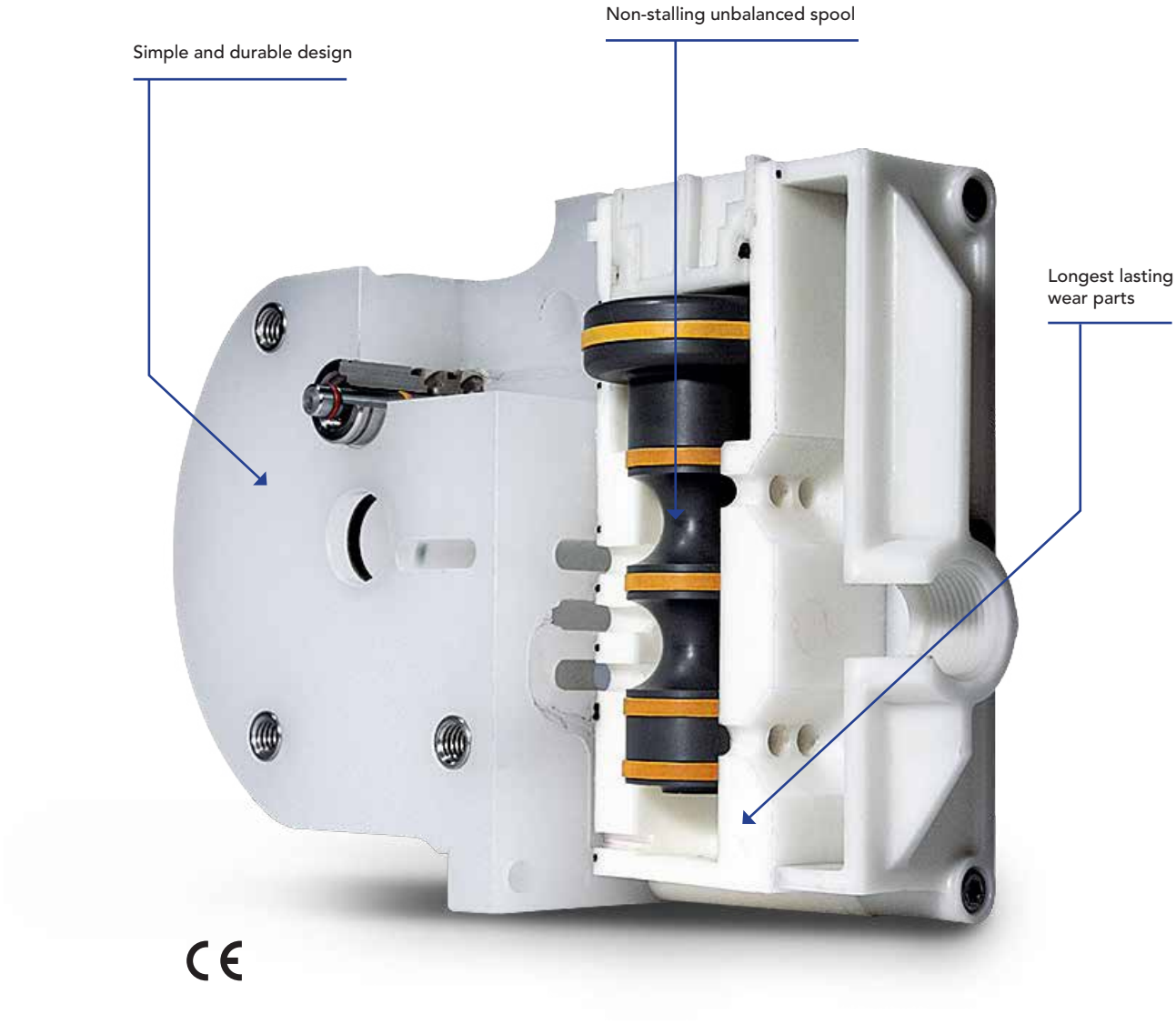



PS2 Saniflo HS

25 mm (1") PRO-FLO SHIFT SANIFLO HYGIENIC SERIES METAL PUMP

Air Inlet: 1/2" FNPT
Tri-Clamp Inlet: 25 mm (1")
Tri-Clamp Discharge: 25 mm (1")
Valve Options:
Ball

Max. Flow Rate:
121 lpm (32 gpm)
Max. Inlet Pressure:
8.6 bar (125 psig)
Max. Size Solids:
6.4 mm (1/4")

Max. Suction Lift:
3.9 m Dry (13')
7.9 m Wet (26')
Shipping Weight:
40 kg (80 lb)

Dimensions

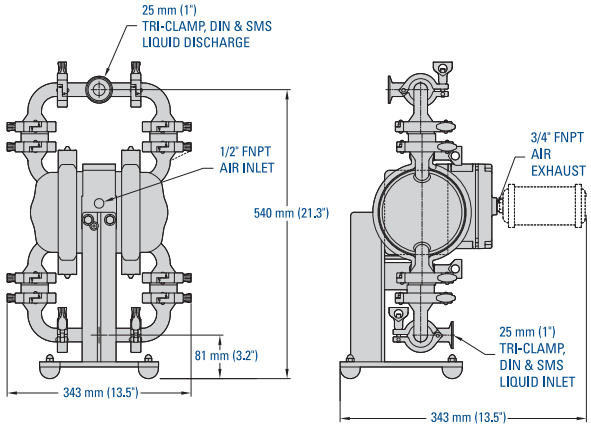

Flow Curve FULL-STROKE INTEGRAL PISTON DIAPHRAGM-FITTED

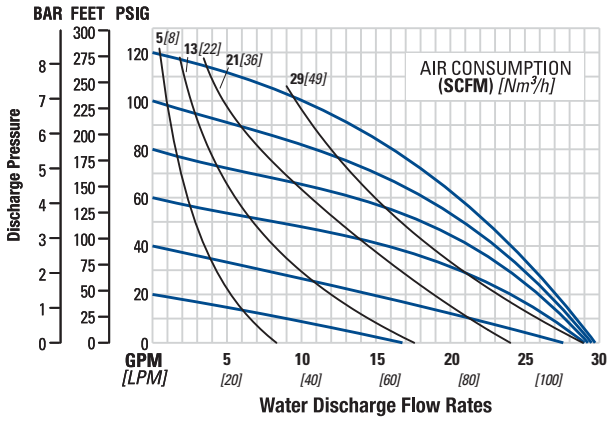

Note that dimensions vary by connection, material and stand option. For additional information, please refer to the PS2 Saniflo HS EOM.



PS4 Saniflo HS

38 mm (1-1/2") PRO-FLO SHIFT SANIFLO HYGIENIC SERIES METAL PUMP

Air Inlet: 3/4" FNPT
Tri-Clamp Inlet: 38 mm (1-1/2")
Tri-Clamp Discharge: 38 mm (1-1/2")
Valve Options:
Ball
Mushroom

Max. Flow Rate:
357 lpm (94 gpm)
Max. Inlet Pressure:
8.6 bar (125 psig)
Max. Size Solids:
Ball Valve 12.7 mm (1/2")
Mushroom Valve 6.4 mm (1/4")

Max. Suction Lift:
5.4 m Dry (17.6')
9.0 m Wet (29.5')
Shipping Weight:
51 kg (112 lb)

Dimensions

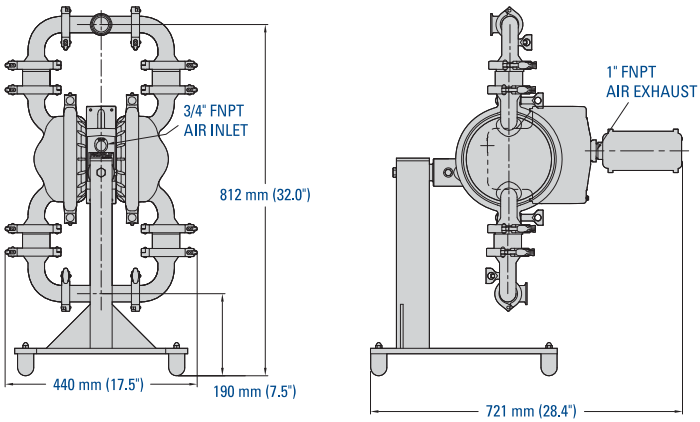

Flow Curve FULL-STROKE INTEGRAL PISTON DIAPHRAGM-FITTED

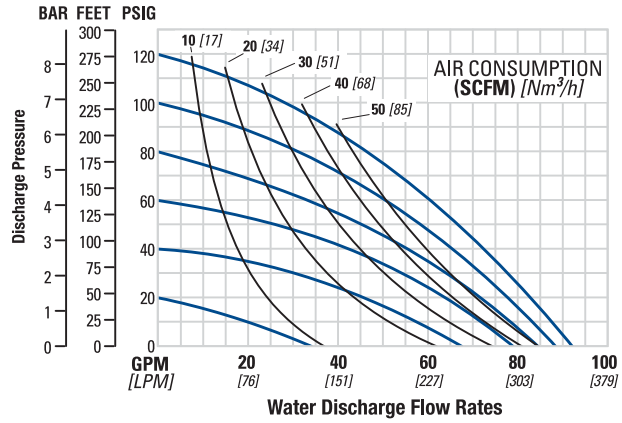

Note that dimensions vary by connection, material and stand option. For additional information, please refer to the PS4 Saniflo HS EOM.



PS8 Saniflo HS

51 mm (2") PRO-FLO SHIFT SANIFLO HYGIENIC SERIES METAL PUMP

Air Inlet: 3/4" FNPT
Tri-Clamp Inlet: 51 mm (2")
Tri-Clamp Discharge: 51 mm (2")
Valve Options:
Ball
Flap
Mushroom

Max. Flow Rate:
575 lpm (152 gpm)

Max. Inlet Pressure:
8.6 bar (125 psig)

Max. Size Solids:
Ball Valve 12.7 mm (1/2")
Flap Valve 47.5 mm (1-7/8")
Mushroom Valve 6.4 mm (1/4")

Max. Suction Lift:
4.1 m Dry (13.6')
9.0 m Wet (29.5')

Shipping Weight:
49 kg (109 lb)

Dimensions

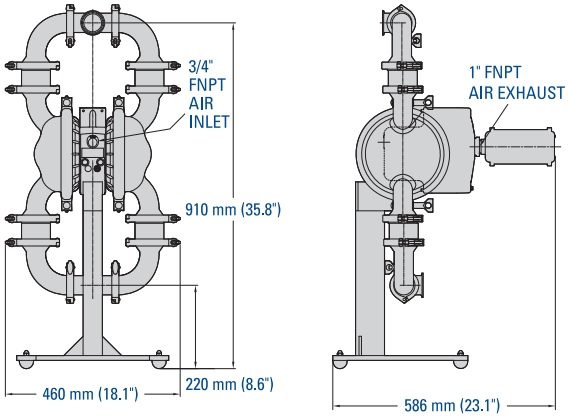

Flow Curve FULL-STROKE INTEGRAL PISTON DIAPHRAGM-FITTED

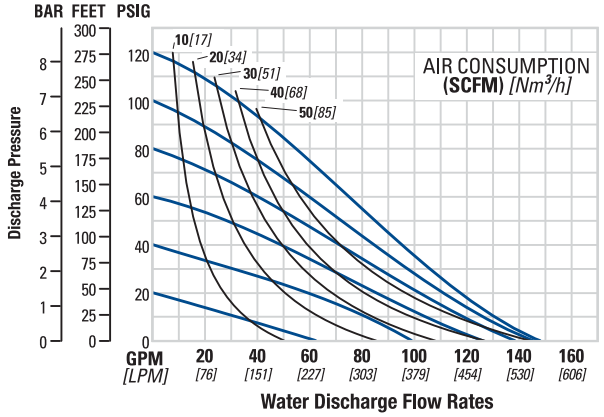

Note that dimensions vary by connection, material and stand option. For additional information, please refer to the PS8 Saniflo HS EOM.

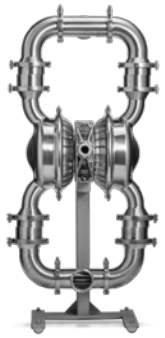

PS15 Saniflo HS

76 mm (3") PRO-FLO SHIFT SANIFLO HYGIENIC SERIES METAL PUMP

Air Inlet: 3/4" FNPT
Tri-Clamp Inlet: 76 mm (3")
Tri-Clamp Discharge: 76 mm (3")
Valve Options:
Ball
Flap
Mushroom

Max. Flow Rate:
844 lpm (223 gpm)

Max. Inlet Pressure:
8.6 bar (125 psig)

Max. Size Solids:
Ball Valve: 19.1 mm (3/4")
Flap Valve: 60.3 mm (2-3/8")
Mushroom Valve: 9.5 mm (3/8")

Max. Suction Lift:
4.4 m Dry (14.4')
9.0 m Wet (29.5')

Shipping Weight:
98 kg (216 lb)

Dimensions

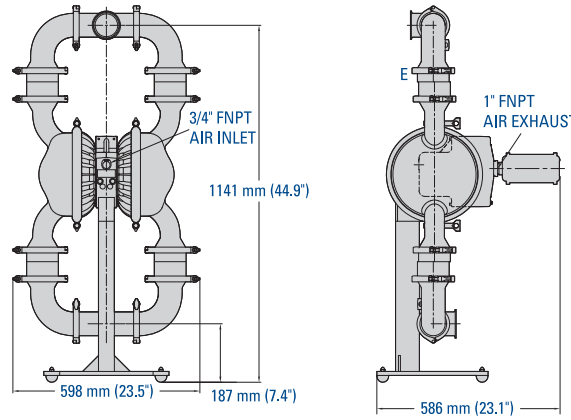

Flow Curve FULL-STROKE INTEGRAL PISTON DIAPHRAGM-FITTED

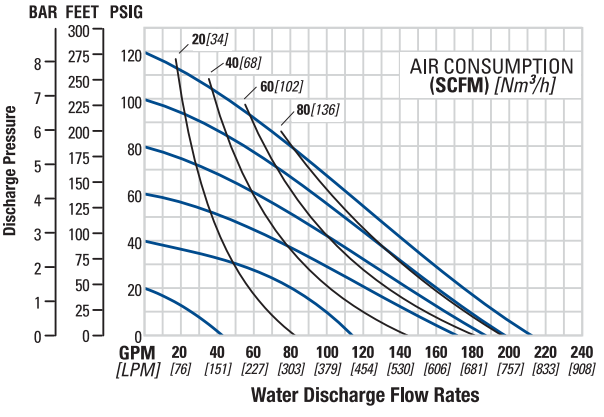

Note that dimensions vary by connection, material and stand option. For additional information, please refer to the PS15 Saniflo HS EOM.



76 mm (3") HIGH PRESSURE SANIFLO HYGIENIC SERIES METAL PUMP

Air Inlet 3/4" FNPT
Tri Clamp Inlet: 76 mm (3")
Tri-Clamp Discharge: 76 mm (3")
Valve Options:
Ball
Mushroom

Max. Flow Rate:
291 lpm (77 gpm)
Max. Inlet Pressure:
8.6 bar (125 psig)
Max. Size Solids:
6.4 mm (1/4")

Max. Suction Lift:
3.8 m Dry (12.5')
9.0 m Wet (29.5')
Shipping Weight:
115 kg (254 lb)

H1500 HS

Dimensions

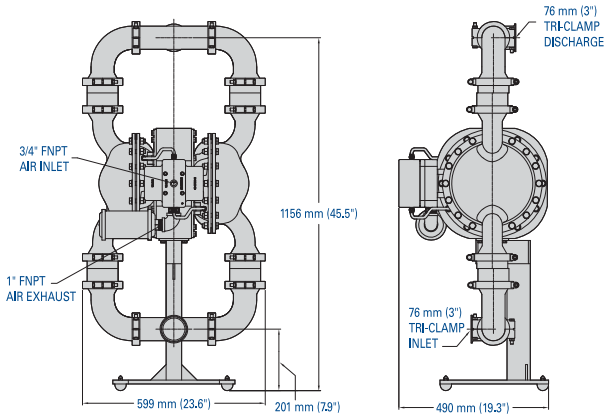

Flow Curve FULL-STROKE INTEGRAL PISTON DIAPHRAGM-FITTED

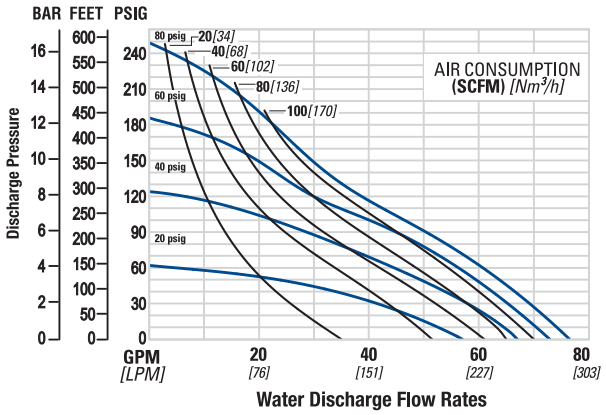

Note that dimensions vary by connection, material and stand option. For additional information, please refer to the H1500 HS EOM.



13 mm (1/2") PRO-FLO SHIFT SANIFLO FDA METAL PUMP

Air Inlet: 1/2" FNPT
Tri-Clamp Inlet: 25 mm (1")
Tri-Clamp Discharge: 25 mm (1")

Max. Flow Rate:
60.2 lpm (15.9 gpm)
Max. Inlet Pressure:
8.6 bar (125 psig)
Max. Size Solids:
1.6 mm (1/16")

Max. Suction Lift:
5.9 m Dry (19.3')
9.8 m Wet (32.3')
Shipping Weight:
9 kg (20 lb)

PS1 Saniflo FDA

Dimensions

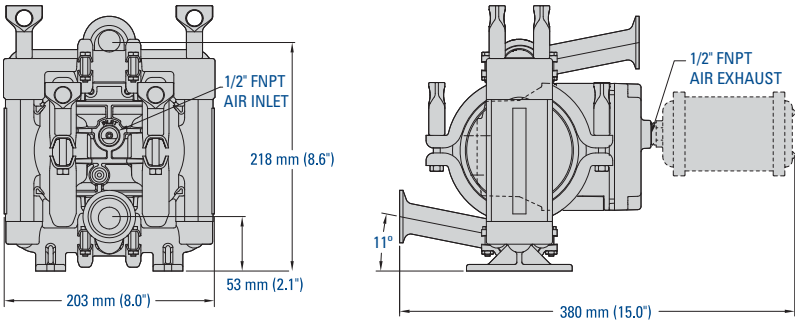

Flow Curve TPE-FITTED

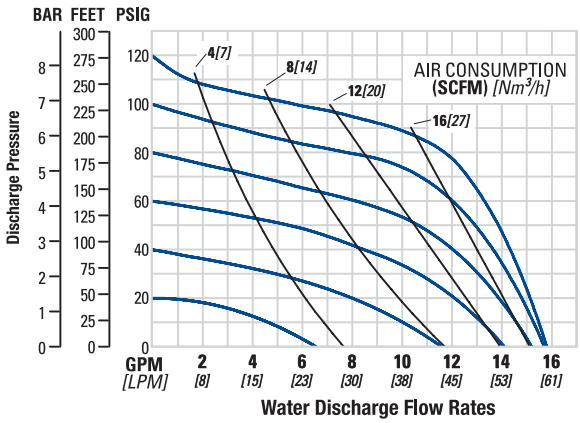

For additional information, please refer to the PS1 Metal EOM.

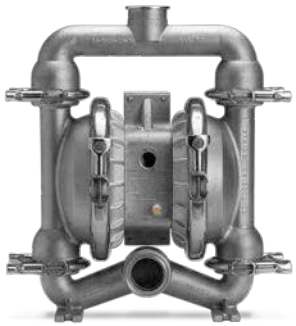

38 mm (1-1/2") PRO-FLO SHIFT SANIFLO FDA METAL PUMP

Air Inlet: 3/4" FNPT
Tri-Clamp Inlet: 51 mm (2")
Tri-Clamp Discharge: 51 mm (2")

Max. Flow Rate:
375 lpm (99 gpm)

Max. Inlet Pressure:
8.6 bar (125 psig)

Max. Size Solids:
4.8 mm (3/16")

Max. Suction Lift:
7.1 m Dry (23.3')
8.6 m Wet (28.4')

Shipping Weight:
28 kg (62 lb)

PS4 Saniflo FDA

Dimensions

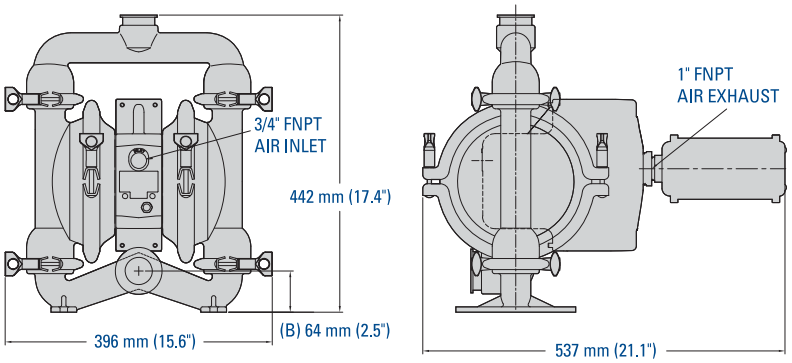

Flow Curve EZ-INSTALL TPE-FITTED

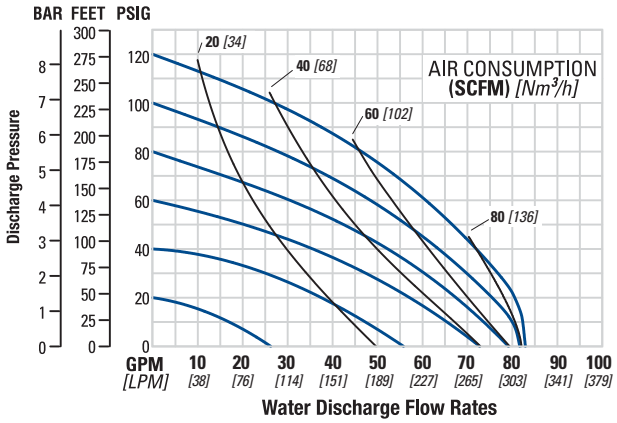

Note that dimensions vary by material. For additional information, please refer to the PS4 Metal EOM.



51 mm (2") PRO-FLO SHIFT SANIFLO FDA METAL PUMP

Air Inlet: 3/4" FNPT
Tri-Clamp Inlet: 64 mm (2-1/2")
Tri-Clamp Discharge: 64 mm (2-1/2")

Max. Flow Rate:
723 lpm (191 gpm)

Max. Inlet Pressure:
8.6 bar (125 psig)

Max. Size Solids:
6.4 mm (1/4")

Max. Suction Lift:
7.2 m Dry (23.8')
9.0 m Wet (29.5')

Shipping Weight:
53 kg (117 lb)

PS8 Saniflo FDA

Dimensions

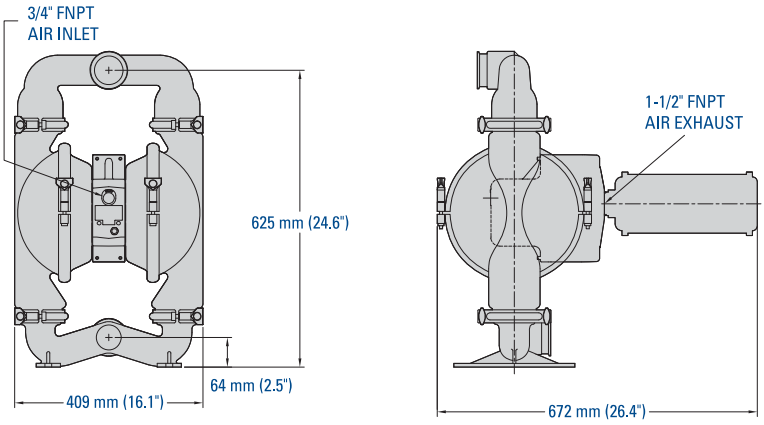

Flow Curve EZ-INSTALL TPE-FITTED

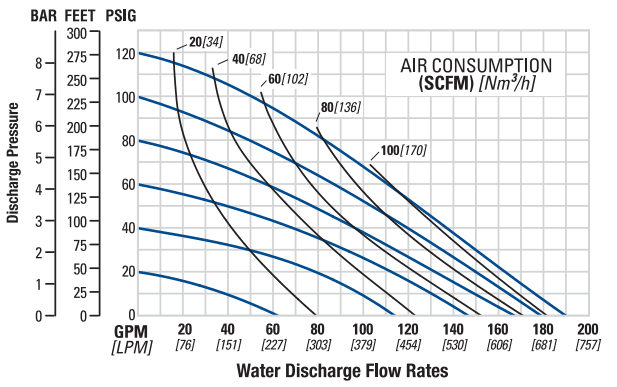

Note that dimensions vary by material. For additional information, please refer to the PS8 Metal EOM.



76 mm (3") PRO-FLO SHIFT SANIFLO FDA METAL PUMP

Air Inlet: 3/4" FNPT
Tri-Clamp Inlet: 76 mm (3")
Tri-Clamp Discharge: 76 mm (3")

Max. Flow Rate:
927 lpm (245 gpm)

Max. Inlet Pressure:
8.6 bar (125 psig)

Max. Size Solids:
9.5 mm (3/8")

Max. Suction Lift:
6.6 m Dry (21.6')
8.6 m Wet (28.4')

Shipping Weight:
105 kg (230 lb)

PS15 Saniflo FDA

Dimensions

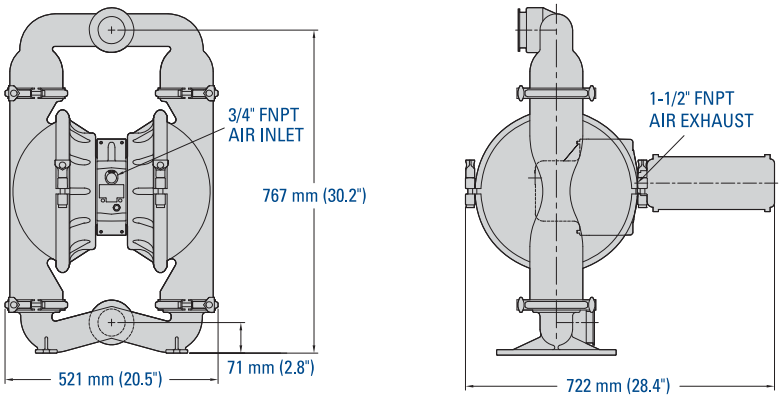

Flow Curve EZ-INSTALL TPE-FITTED

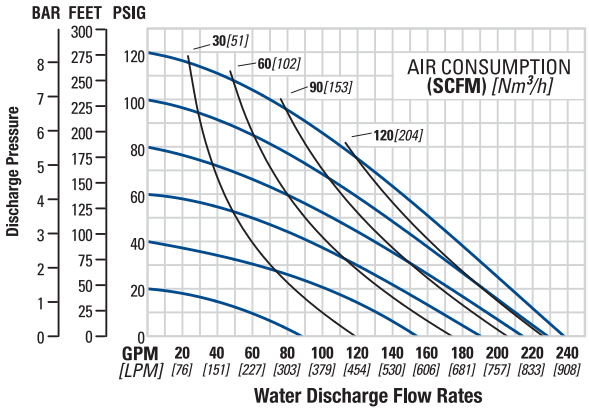

Note that dimensions vary by material. For additional information, please refer to the PS15 Metal EOM.

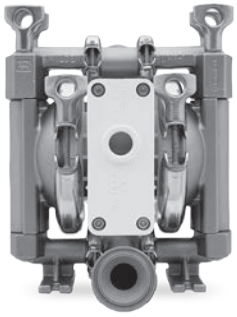

13 mm (1/2") PRO-FLO SANIFLO FDA METAL PUMP

Air Inlet: 1/4" FNPT
Tri-Clamp Inlet: 25 mm (1")
Tri-Clamp Discharge: 25 mm (1")

Max. Flow Rate:
58.7 lpm (15.5 gpm)

Max. Inlet Pressure:
8.6 bar (125 psig)

Max. Size Solids:
1.59 mm (1/16")

Max. Suction Lift:
5.8 m Dry (19.0')
9.5 m Wet (31.0')

Shipping Weight:
9 kg (20 lb)

P1 Saniflo FDA

Dimensions

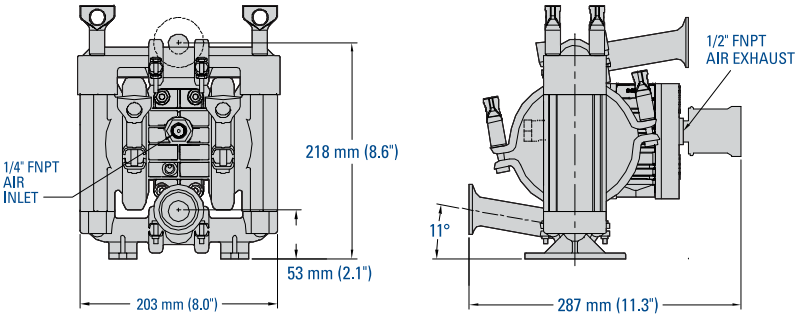

Flow Curve TPE-FITTED

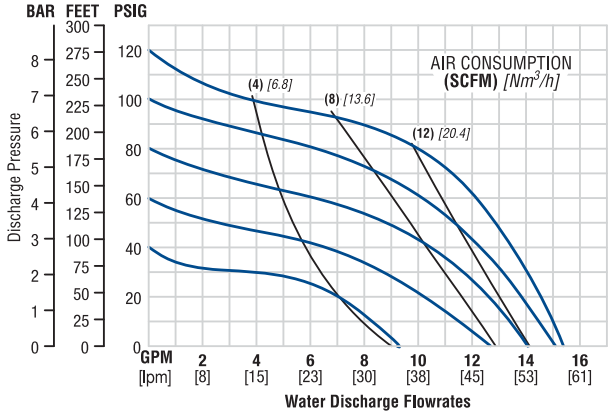

For additional information, please refer to the P1 Metal EOM.

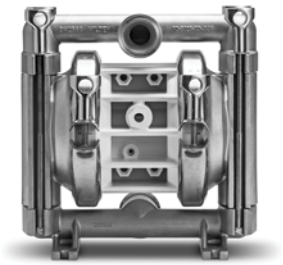

25 mm (1") PRO-FLO SANIFLO FDA METAL PUMP

Air Inlet: 1/4" FNPT
Tri-Clamp Inlet: 38 mm (1-1/2")
Tri-Clamp Discharge: 38 mm (1-1/2")

Max. Flow Rate:
172 lpm (45.5 gpm)

Max. Inlet Pressure:
8.6 bar (125 psig)

Max. Size Solids:
3.2 mm (1/8")

Max. Suction Lift:
7.6 m Dry (25.0')
9.0 m Wet (29.5')

Shipping Weight:
17 kg (37 lb)

P2 Saniflo FDA

Dimensions

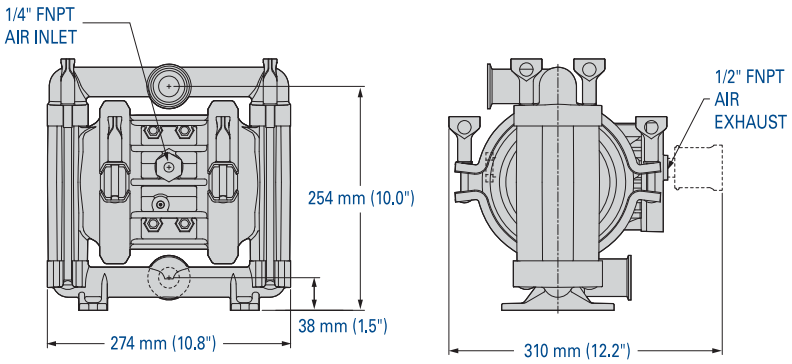

Flow Curve TPE-FITTED

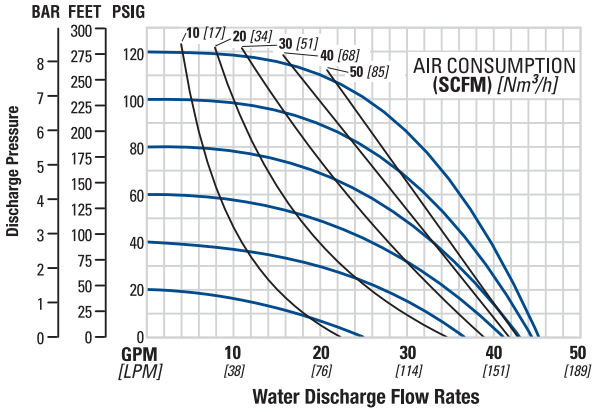

For additional information, please refer to the P2 Metal EOM.



38 mm (1-1/2") PRO-FLO SANIFLO FDA METAL PUMP

Air Inlet: 1/2" FNPT
Tri-Clamp Inlet: 51 mm (2")
Tri-Clamp Discharge: 51 mm (2")

Max. Flow Rate:
330 lpm (87.2 gpm)

Max. Inlet Pressure:
8.6 bar (125 psig)

Max. Size Solids:
4.8 mm (3/16")

Max. Suction Lift:
6.4 m Dry (21.0')
9.3 m Wet (30.6')

Shipping Weight:
20 kg (45 lb)

P4 Saniflo FDA

Dimensions

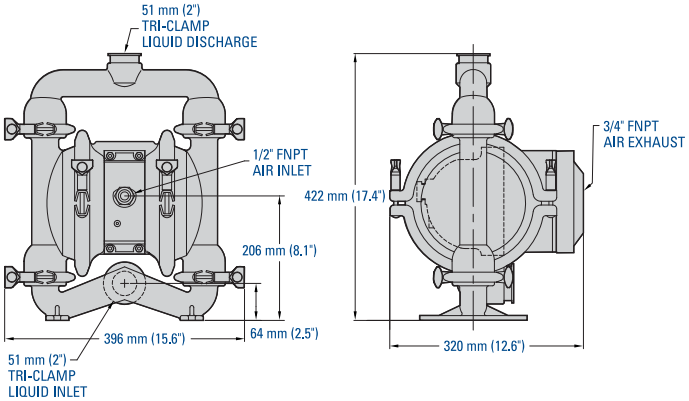

Flow Curve TPE-FITTED

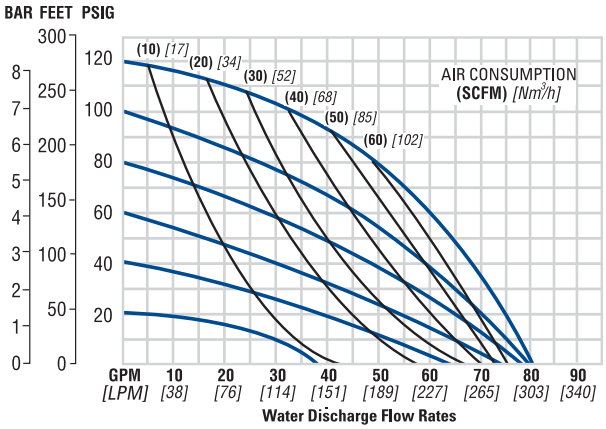

For additional information, please refer to the P4 Metal EOM.



51 mm (2") PRO-FLO SANIFLO™ FDA METAL PUMP

Air Inlet: 1/2" FNPT
Tri-Clamp Inlet: 64 mm (2-1/2")
Tri-Clamp Discharge: 64 mm (2-1/2")

Max. Flow Rate:
630 lpm (166 gpm)

Max. Inlet Pressure:
8.6 bar (125 psig)

Max. Size Solids:
6.4 mm (1/4")

Max. Suction Lift:
6.9 m Dry (22.7')
8.6 m Wet (28.4')

Shipping Weight:
51 kg (112 lb)

P8 Saniflo FDA

Dimensions

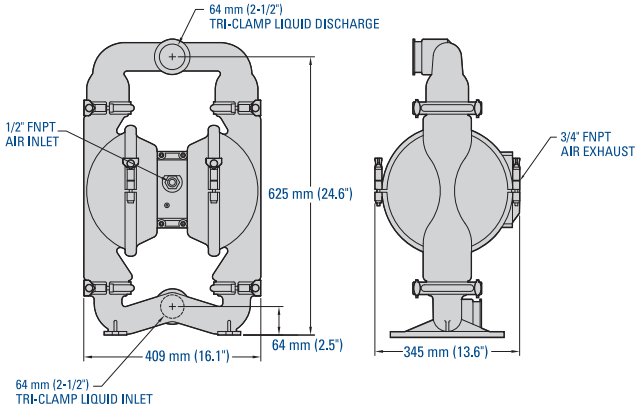

Flow Curve TPE-FITTED

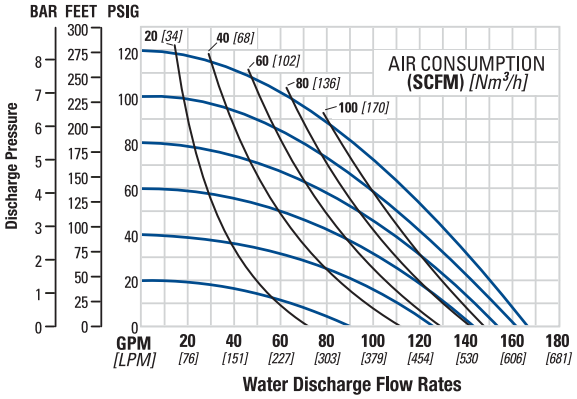

For additional information, please refer to the P8 Metal EOM.

Notes

WILDEN

PSG
22069 Van Buren Street
Grand Terrace
CA, 92313-5651
USA
P: +1 (909) 422-1730
F: +1 (909) 783-3440
wildenpump.com

PSG a DOVER company

Where Innovation Flows

WIL-12011-C-14

Authorized PSG® Partner:

Copyright 2022 PSG®, a Dover company

PSG® reserves the right to modify the information and illustrations contained in this document without prior notice. This is a non-contractual document. 08-2022